Oval Wheel Meter

Small OI Series

with Pulse Pick-Ups

AG 19/20/41

with Mechanical Counters

R7

Operating Manual

Bopp & Reuther
Messtechnik GmbH
Am Neuen Rheinhafen 4
67346 Speyer
Germany

Phone : +49 6232 657-0
Fax: +49 6232 657-505
info@bopp-reuther.com
www.bopp-reuther.com

A-EN-01210-KLRev.G
03/2023

Contents

Foreword

I. Transport, Delivery, Storage

Storage and transport:

Protect devices against humidity, soiling, impacts and damages

Inspection of the delivery:

Upon receipt, check the delivery for completeness. Compare the device data with thedata on the delivery note and in the order records.

Report any in-transit damage immediately upon delivery. Damages reported at a later date shall not be recognised.

II. Warranty

Please refer to the contractual terms and conditions relating to delivery for the scope and period of warranty.
Warranty claims shall be conditional to correct installation and commissioning in accordance with the operating instructions of the device. The necessary installation, start-up and maintenance work should only be carried out by qualified and authorized personnel.

1. Identification

Manufacturer	Bopp & Reuther Messtechnik GmbH Am Neuen Rheinhafen 4 67346 Speyer, Germany Phone : +49 6232 657-0 Fax : +49 6232 657-505
Type of product	direct volumetric meter (positive displacement meter)
Product name	OI oval wheel meters with pulse pick-ups AG 19/20 or/and mechanical R7 counters
Version no.	A-EN-01210-KLRev.G

2. Area of Application

The quantity control of certain industrial liquids is an economic necessity considering the high value of these products. The design and materials of the volume measuring instruments required for these procedures have to be adapted to the particular operating conditions and characteristics of the liquids to be measured.
The field of application for OI oval wheel meters includes measuring, metering and controlling of liquids. OI oval wheel meters meet all these requirements. They are used for measuring liquid semi-finished and finished products, such as liquid gases, acids, alkalis, greases, alcohols, solvents, dispersions, polymerisates, polycondensates, varnishes, paints, adhesives, etc.
The measurement of liquids with very high viscosity and a low pressure loss should be particularly emphasized in this respect.
Small OI oval wheel meters are produced with a nominal width of 6 to 15 mm. Depending on the nominal width and the type of material, they can be used up to PN 40; the maximum permissible operating temperature is 170°C.

3. Principle of Operation and System Design

3.1 Measuring principle

Oval wheel meters are direct volumetric meters for liquids with movable partitions (displacement flow meters). The oval wheel meter consists of a measurement chamber housing with two pivoted oval wheels which are toothed and roll off each other in counter-rotations.

The diagram displays oval wheel movement during the measurement process.

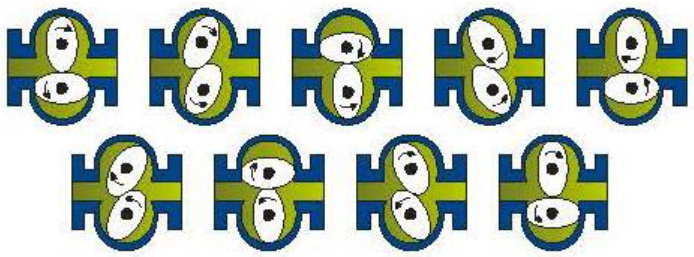

Each rotation of the oval wheels displaces four discrete volumes of liquid through the meter (between the oval wheel and measurement chamber).

The rotation of the oval wheel meter is transferred to a mechanical counter and/or a pulse pick-up via a magnetic clutch and gearing for measurement purposes.

3.2 System design

Oval wheel meters with attachments comprise the following components:

Sensor:
Measured value logging occurs via OI series oval wheel meters.

Pulse pick-up AG 19 and AG 20:
The AG 19 and/or AG 20 pulse pick-up is used for controlling electro-mechanical counters (observe $f_{max.}$), indicators, recorders, regulators, electronic meters, data processing systems as well as remote readout printers with a step motor.

Pulse pick-up AG 41:
The AG 41 pulse pick-up is used for controlling electronic meters, indicators, recorders, regulators, data processing systems as well as remote readout printers with a step motor.

Roller counter R7

OI small oval meters are available with a 7-digit non-resettable counter. The counter can be combined with the AG 19 and AG 20 pulse pick-ups.

4. Input

4.1 Measured variable

Liquid volumes and volumetric flow rate

4.2 Measuring range

MEASURING RANGES FOR MEDIA WITH NEWTONIAN FLOW PROPERTIES

Type	DN	Flow rate Q_{max} [l/h]	Load at viscosity	0.3 – 0.8 mPa•s		0.8 – 2 mPa•s		2 - 50 mPa•s		50 - 150 mPa•s		150 – 350 mPa•s		350 - 1000 mPa•s	
				[l/min]	[l/h]	[l/min]	[l/h]	[l/min]	[l/h]	[l/min]	[l/h]	[l/min]	[l/h]	[l/min]	[l/h]
OI 03	6 15	120	Min	0.3	20	0.2	12	0.2	12	0.18	11	0.1	6	0.03	2
			Max	1.6	100	2	120	2	120						
			Continuous processing	1	60	1.3	80	1.8	110	1.8	110	1	60	0.4	25
			Batch processing	1.3	80	1.8	110	2.0	120						
OI 06	10 15	250	Min	0.6	40	0.4	25	0.4	25	0.3	20	0.2	13	0.08	5
			Max	3.3	200	4.1	250	4.1	250						
			Continuous processing	2.1	130	2.6	160	1.8	110	3.7	225	2.1	130	0.8	50
			Batch processing	2.6	160	3.7	225	4.1	250						
OI 1	15	600	Min	1.6	100	1	60	1	60	0.9	54	0.6	36	0.2	12
			Max	8.3	500	10	600	10	600						
			Continuous processing	5	300	6.6	400	9	540	9	540	6	360	2	120
			Batch processing	7.5	450	9	540	10	250						

The values in the table are general nominal ratings. The exact range depends on the measured media, viscosity and type of meter and is listed in the data sheet.

Measuring ranges for cold water:
Use the values in column 0.3 – 0.8 mPa·s; 50 % and 70 % of the maximum flow rate must be used for permanent load and maximum load or batch processing respectively.

MEASURING RANGES FOR SULPHURIC ACID

Type	DN	Flow rate Q_{max} [l/h]	Load at temperature	up to 20°		up to 30°		up to 40°	
				[l/min]	[l/h]	[l/min]	[l/h]	[l/min]	[l/h]
OI 03	6 15	120	Min	0.2	12	0.2	12	0.2	12
			Max	2	120	1.6	96	1.3	78
			Continuous processing	1.3	78	1	60	0.8	48
OI 06	10 15	250	Min	0.34	20.4	0.34	20,4	0.34	20,4
			Max	4.2	252	3.4	204	2.7	162
			Continuous processing	2.7	162	2.2	132	1.7	102
OI 1	15	600	Min	1	60	1	60	1	60
			Max	7	420	5.6	336	4.6	276
			Continuous processing	4.6	276	3.7	222	2.8	168

5. Output

5.1 Output Signal

5.1.1 Pulse pick-up AG 19, AG 20 and AG 41

AG 19 and AG 20

Technical data

Number of control flags	1/2/10/20/32
Max. permissible speed	350/min
Max. pulse frequency	187 Hz, depending on the meter version
Permissible ambient temperature	-25°C to +90°C
Degree of protection for housing	IP 54 (DIN 40 050)
Degree of protection for control head	IP 67 (DIN 40 050)
Ex-protection	Ex II 2G EX ia IIC T6
Connection of external devices	In compliance with EN 50227 (NAMUR) and ex-approval

Oval wheel meter Data					Pulse pick-up frequency in regard to Q_{max}								
					≤10 Hz for: Remote readout			> 10 Hz for: Control, display, registering, etc.					
	DN	Qmax	nAG	Display Counter	Slot number of the flag disc								
					1	2	10	10		20		32	
Type	M m	ℓ / min	U / min	l or m³	Pulse / l			Pulse / s	Pulse / l	Pulse / s	Pulse / l	Pulse / s	Pulse / l
OI 03	6 15	2	19.7	1	-	-	100	-	-	-	-	-	-
OI 06	10 15	4.2	42	1	10	20	100	-	-	14	200	22.22	320
OI 1	15	10	100	1	10	20	-	16.7	100	33.3	200	53.3	320

AG 41 with pre-amplifier PV11

Technical data

Number of control wires	20
Max. permissible speed	1000/min
Max. pulse frequency	Max. 333.33 Hz, depending on the meter version
Permissible ambient temperature	-40 to +70°C
Ingress protection for housing	IP 65 (EN 60529)
Ex-protection	Ex II 2G EX ib IIC T6/5/4
Connection of external devices	In compliance with EN 50227 (NAMUR) and ex-approval

Temperatures and Ex-protection temperature classes

without temperature extension		
Class	T_U	T_{media}
T6	60°C	60°C
minimum	-40°C	-40°C

for all classes

with temperature extension		
Class	T_U	T_{media}
T3	70°C	170°C
T4	70°C	135°C
T5	70°C	100°C
T6	60°C	60°C
minimum	-40°C	-60°C
Temperature extensions must stick out of the thermal insulation in full length!		

for all classes

The Wiegand pre-amplifier PV 11, in connection with the AG 41 pulse pick-up, is intended for volume pulse scanning with oval wheel meters. As a category 2G device it can be operated in Zone 1 potentially explosive atmospheres.
The Wiegand sensor coils of the above mentioned pulse pick-up types are classed as “simple electrical apparatus” according to EN 60079-14:1997, Sections 3.21 and 12.2.1. Therefore, the explosion protection approval for the installed Wiegand pre-amplifier PV 11 applies to the overall device of the meter equipped with one of these pulse pick-ups.

The spike pulses generated in the scanning unit by the Wiegand effect are translated into pulses with a width of 500µs by the downstream multi-vibrator at the trigger level. These are split into two separate NAMUR switching steps whose signals have a phase shift of 180°.

Type	DN	Qmax	nAg	f_{max}	K_m
	mm	l / h	U / min	Pulse/s — approx.	Pulse/l — approx.
OI 03	6	120	666.66	222.2	6666.66
OI 06	10	250	701.5	233.83	3367.2
OI 1	15	600	1000	333.33	2000

Exact values for the specifications pulse/ℓ or pulse/s are only available after the accuracy test.

5.1.3 Mechanical roller counter R7

OI small oval meters are available with a 7-digit non-resettable counter.

- Roller counter max. reading 999,999.9 l
- A single revolution of the last number roller equals 1 l
- The smallest division of the last roller is 0.05 l

5.2 Electrical and thermal safety relevant data

see Appendix EC Type Examination Certificates

6. Characteristic Values

6.1 Reference conditions

Oval wheel meters are calibrated at test benches monitored by the German Board of Weights and Measures.
Pressure: 2 to 7 bar

Temp: 20°C to 30°C

6.2 Measured error

Type	Up to 0.8 mPa·s 10-100 % of Q_{nom}	Up to 2 mPa·s 10-100 % of Q_{nom}	Up to 50 mPa·s 10-100 % of Q_{nom}	Up to 50 mPa·s 10-100 % of Q_{nom}
OI 03	< ± 2 %	< ± 1 %	< ± 0.4 %	< ± 0.3 %
OI 06	< ± 1 %	< ± 0.5 %	< ± 0.4 %	< ± 0.3 %
OI 1	< ± 1 %	< ± 0.5 %	< ± 0.4 %	< ± 0.3 %

6.3 Repeatability

< 0.02 %

6.4 Ambient temperature influence

< 0.005 % / °C

6.5 Liquid temperature influence

Depends on the viscosity of the measured liquid.

7. Operating Conditions

7.1 Installation conditions

7.1.1 Installation notes

Warning

Please read the operating instructions carefully prior to installation and start-up.
Depressurize and allow the system to **cool down** prior to installation or disassembly.

7.1.1.1 General notes

- Bopp & Reuther oval wheel meters are precision flow meters. Input and output ports are closed to prevent impurities entering the device. Only remove protective caps immediately prior to use.
- Observe operating data marked on the oval wheel meter. Also observe data in the order confirmation and on the data sheet. If the device is to be used under different operating conditions, consult Bopp & Reuther Messtechnik GmbH in advance, always state the device number.
- Install the oval wheel meter in the pressure pipe behind the pump. (approx. 3 m liquid column pressure drop for nominal flow rate).
- Install the oval wheel meter in a way that it remains completely filled with liquid even when idle.
- In order to prevent measuring errors due to soiling etc., the user should take appropriate preventative measures (e.g. strainer type N).
- Oval wheel meters which are to be used for liquid foodstuffs and stimulants should be thoroughly cleaned prior to use (see Maintenance and Cleaning).

7.1.1.2 Installation

- Remove any impurities from the pipework. For this task, install a fitting part instead of the oval wheel meter and flush the pipe.
- Only remove the protective caps at the oval wheel meter input and output ports immediately prior to installation. Prevent any impurities entering the device during installation.
- The arrows on the oval wheel meter housing indicate the direction of flow.
- The housing cover of the oval wheel meter has to be vertical to ensure that the oval wheel axles are positioned horizontally, irrespective of the pipework.
- Install the oval wheel meter strain-free into the pipework.

The sensor can be used together with the pulse pick-up AG 19/20 and AG 41 according to the type of protection “intrinsically safe” in potentially explosive areas.

AG 41 with pre-amplifier PV11:	Ex II 2G EX ib IIC T6/5/4
AG 19, AG 20:	Ex II 2G EX ia IIC T6

The EMC protection can only be guaranteed with shielded wires. The shielding has to be applied in the metal PG connecting bolts.

7.1.2 Start-up conditions

Important

- **Start up the oval wheel meter with a gradually increasing the flow rate.**
- **In measuring systems for viscous liquids which require heating, switch on the heating system of the oval wheel meter, filter and pipework in sufficient time prior to start-up, subsequently start up the device with a gradually increasing flow rate.**

7.1.3 Changing the direction of flow

If **the meter head readout position needs to be altered** during meter installation, please observe the following instructions:

- Initially install the meter in the pipework making sure that the arrow on the housing points in the intended flow direction.
- With oval wheel meters, ensure that the bearing shafts of the oval wheels are horizontal. This is the case when the housing cover is vertical.
- Depending on the installation position of the meter, the meter head might be positioned with the digital display is upside down or rotated by 90°.
- When changing the flow direction, loosen the countersunk screws and adjust the mechanical display R7 to the required readout position before retightening the screws.

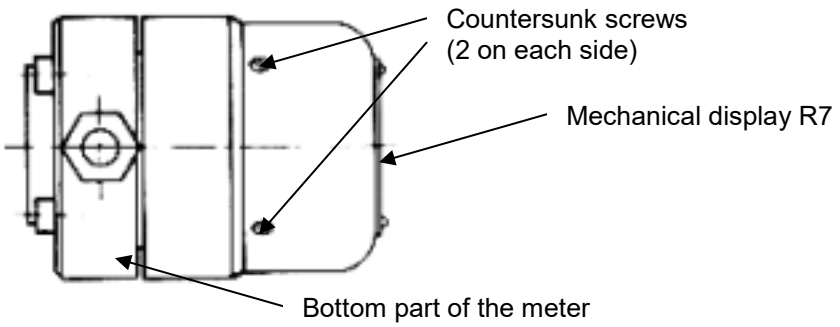

7.2 Ambient conditions

7.2.1 Ambient temperature

OI with AG 19 or / and AG 20: 0 to +90°C
OI with AG 41: 0 to +60°C
OI with roller counter R7: 0 to +90°C

7.2.2 Storage temperature

-25°C to +100°C

7.2.3 Degree of protection

OI with AG 19 or/and AG 20: IP54
OI with AG 41: IP65
OI with roller counter R7: IP54
In accordance with IEC 529/EN 60529

7.2.4 Electromagnetic compatibility

Only applies for devices with pulse pick-ups:

EN 61000-6-2, EN 61000-6-3

The "electromagnetic compatibility" is only guaranteed when the electronics housing is closed.
If the electronics housing is open, interferences can arise due to EMC signal pick-up.

7.3 Process conditions

7.3.1 Liquid temperature

Basic type	Pulse pick-up		Roller counter R7	Ex-tension	Liquid temperature in °C max.
	AG19 AG20	AG41			
OI03	–	•	–	–	60
	–	–	•	–	90
	•	–	•	–	90
	–	•	–	•	170
	•	–	•	•	170
OI06 OI1	–	–	•	–	90
	–	•	–	–	60
	–	•	–	•	170*
	•	–	•	•	170*
	–	–	•	•	170*
	•	–	•	–	90
	–	–	•	•	170*

*with special tolerances for higher temperatures

7.3.2 State of aggregation

Suitable for liquids

7.3.3 Viscosity

0.3 - 1000 mPa·s

7.3.4 Liquid temperature limit

170°C

7.3.5 Liquid pressure limit

depends on the material (for materials see 8.3.)

	DN 6	DN 10	DN 15
F4	PN 25	PN 25	PN 25
F5	PN 40	PN 40	PN 40

7.3.6 Flow rate limit

All details in l/min

OI 03	OI 06	OI 1
2	4.2	10

7.3.7 Pressure loss

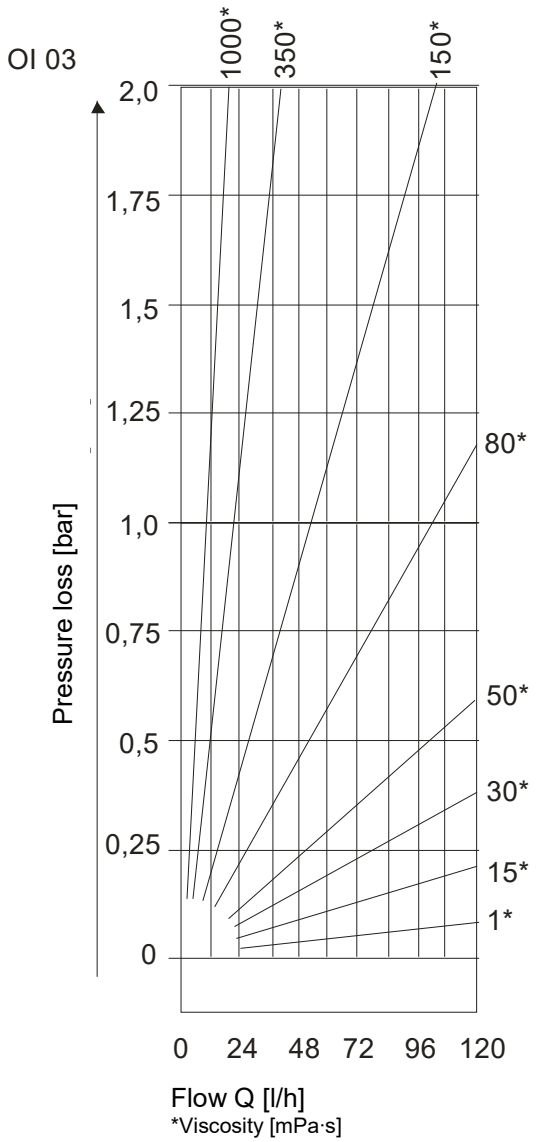

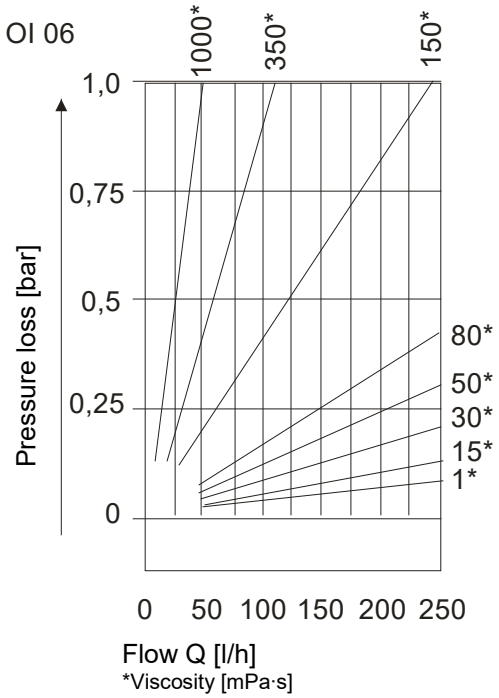

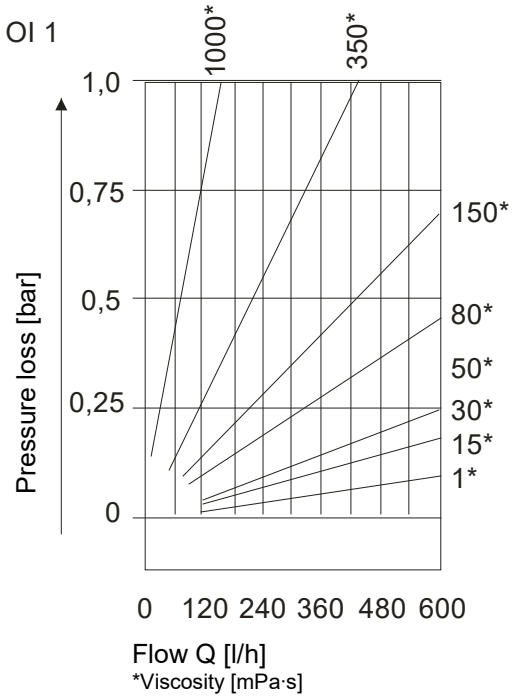

8. Constructive Design

8.1 Model/Dimensions

OI 03 – OI 1 with mechanical roller counter R7 and optional pulse pick-ups AG19, AG 20

Type	DN	Dimensions in mm							Weight approx. kg
		L	L_1	L_2	H_1	H_2	H_3	D	
OI 03	6	272[3)] 283[4)]	150[2)]	-	126	236	346	89[3)] 100[4)]	5 [5)]
	15[1)]	-	-	170				-	
OI 06	10	229[3)] 240[4)]	110	-	126	236	346	89[3)] 100[4)]	5 [5)]
	15[1)]	-	-	170				-	
OI 1	15	-		170	130	240	350	-	13 [5)]

[1)] Only F5 version with a flange design
[2)] Dimension 150 mm includes the 40 mm reducing piece
[3)] F4 version
[4)] F5 version
[5)] The weight increases by approx. 0.6 kg when using a temperature extension

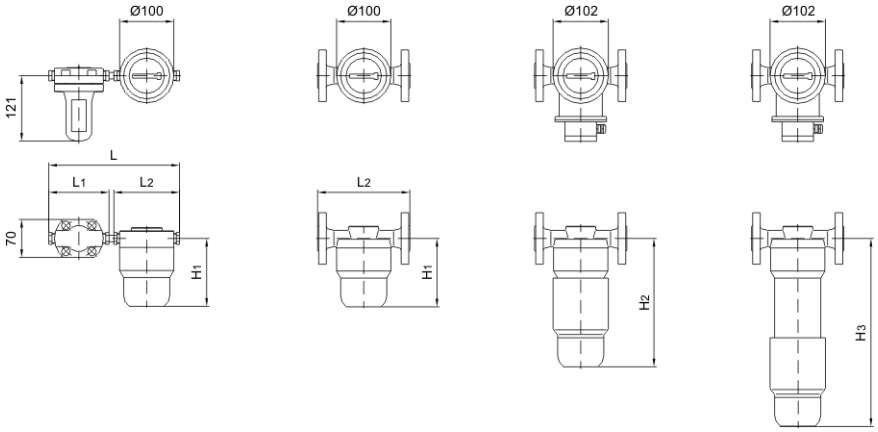

OI 03 – OI 1 with pulse pick-up AG41

Type	DN	Dimensions in mm						Weight Approx. kg
		L	L_1	L_2	H_1	H_2	D	
OI 03	6	272 [3)] 283 [4)]	150 [2)]	106 [3)] 117 [4)]	87	211	105	3.5 [5)]
	15 [1)]	-	-	170				
OI 06	10	229 [3)] 240 [4)]	110	110 [3)] 121 [4)]	91	215	105	3.5 [5)]
	15 [1)]	-	-	170				
OI 1	15	-		170	95	219	105	12 [5)]

[1)] Only F5 version in flange design
[2)] Dimension 150 mm includes the 40 mm reducing piece
[3)] F4 version
[4)] F5 version
[5)] The weight increases by approx. 1.8 kg when using a temperature extension

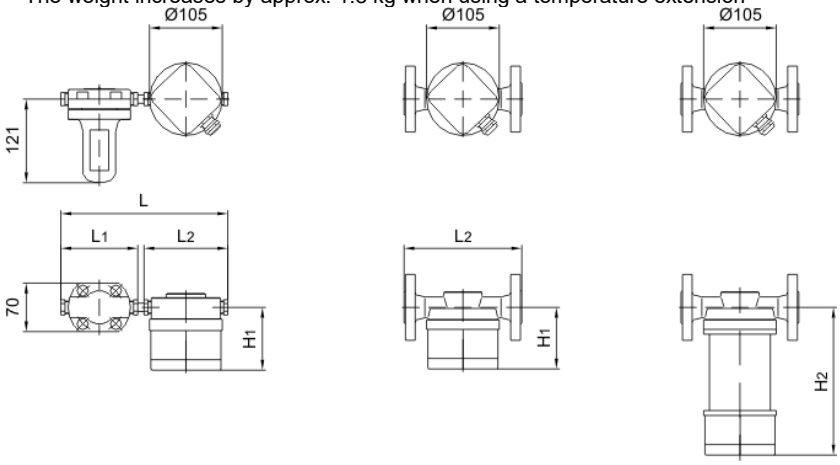

8.2 Weight

See 8.1

8.3 Material

	F4	F5
Housing	brass	CrNiMo
Oval wheels	CrNiMo	CrNiMo
Bearing	Hardened carbon	Hardened carbon

8.4 Process connection

Type	Oval wheel meter and filter							
	DN	Material	Screwed pipe connection according to DIN 2353 pipe		Flange according to DIN		Flange according to ANSI	
			8x1	12x1	PN 25	PN 40	150	300
OI 03	6	F4	•					
		F5	•			•[1)]	•[1)]	•[1)]
OI 06	10	F4		•				
		F5		•		•[1)]	•[1)]	•[1)]
OI 1	15	F4			•		•	
		F5				•	•	•

[1)]DN 15

8.5 Electrical connection

The electrical connections are located inside the terminal box.

AG 19 and AG 20

Connection of external devices	In compliance with EN 50227 (NAMUR) and ex-approval
Control line	max. up to 50 Ohm/wire AG 19: 2-wires, shielded AG 20: 4-wires, twisted in pairs
Cable connection	M 20x1.5

AG 41 with pre-amplifier PV11

Connection of external devices	In compliance with EN 50227 (NAMUR) and Ex approval
Control line	max. up to 50 Ohm/wire 2-wire, shielded (channel I+II 4-wire), twisted in pairs; blue protective shell
Cable connection	M 20x1.5

Caution!

Always observe the respective national installation regulations when installing in potentially explosive areas (for Germany: EN 60079-14 or VDE 0165).

Terminal connection for AG 19 and AG 20

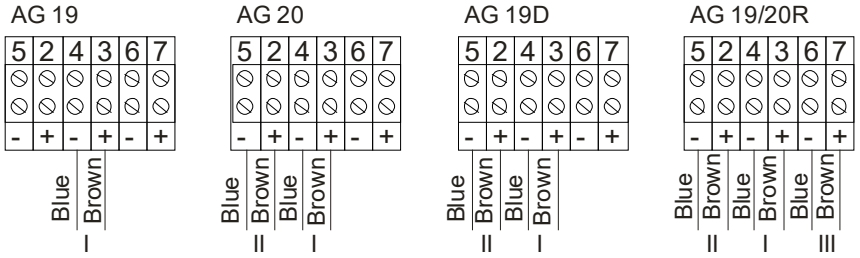

For AG 19/20R: I: Guide Channel, II: Reference Channel, III: Backflow

Terminal connection for AG 41 with pre-amplifier PV11

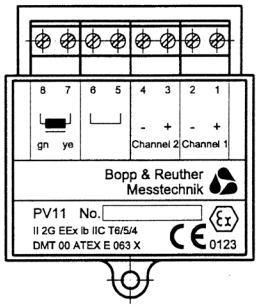

The sensor is internally connected to terminals 8 and 7.
For 1-channel operation, use terminals 1 and 2.
The signal of channel 2 is inverted with regard to channel 1.

9. Display

Roller counter R7:
OI small oval meters are available with a 7-digit non-resettable counter. The counter can be combined with the AG 19 and AG 20 pulse pick-ups. They are used as transducers for flow measurement, flow control, remote readout or data processing.

9.1 General

The meters are factory set to the operating conditions specified in the order. See the enclosed configuration data sheet for the set values.

Pressure equipment directive

THE SMALL OI OVAL WHEEL METERS ARE SUITABLE FOR GROUP 1 LIQUIDS
CLASSIFICATION ACC. TO ARTICLE 3, §3

(designed and produced according to excellent engineering techniques)

Appendix

A. Troubleshooting

The oval wheel meters with pulse pick-ups and mechanical counters from Bopp & Reuther Messtechnik are maintenance free. In case of a fault or an incorrect measurement, please contact the Bopp & Reuther Messtechnik service. If you send the meter to Bopp & Reuther Messtechnik for repairs, please fill in the form in Appendix C2.

Warning!

Always observe local regulations and all the safety instructions in these operating instructions when working at the electrical connections.

B Maintenance, Cleaning, Changing the Indicators

B.1 Maintenance, Cleaning

If the oval wheel meter is to be shut down for a longer period, it should be de-installed, cleaned thoroughly and coated with an acid-free oil. This is not permitted for oval wheel meters used with foods and beverages. Cover the input and output ports with protective caps. Ensure that the oval wheel meters are stored in a dry room.

B.2 Repairs, Hazardous Substances

The following measures have to be carried out before to sending the oval wheel meter to Bopp & Reuther Messtechnik GmbH for repairs:

- Always enclose a note with the device which describes the fault, the application as well as the chemical and physical properties of the measured medium (see Appendix C1).
- Remove any residual liquid. Carefully check gasket grooves and slots in which residual liquid may be trapped. This is extremely important if the liquid is classed as a risk to health.
- We request you never to return devices if you are not absolutely sure that there is no risk to health.

Costs for disposal or personal inquires (burns, etc.) due to incorrect cleaning shall be borne by the operator.

Please contact our service department with regard to oval wheel meter faults:

Bopp & Reuther Messtechnik GmbH
Service
Am Neuen Rheinhafen 4
67346 Speyer, Germany
Phone: +49 6232 657-420
Mob.: +49 15115233023
Fax: +49 6232 657 561
Email: service@bopp-reuther.com

C. Declaration on Decontamination

Bopp & Reuther Messtechnik GmbH
Am Neuen Rheinhafen 4
67346 Speyer
Germany

BOPP & REUTHER MESSTECHNIK

Telephone: +49 (0) 6232 / 657 420
Fax: +49 (0) 6232 / 657 561
Mail: service@bopp-reuther.com
Web: www.bopp-reuther.com

ERA number:

DECLARATION ON DECONTAMINATION OF METERS AND COMPONENTS

Please complete this form and return in advance by email or by Fax to +49(0)6232 / 657 561 in order to receive an Equipment Return Authorisation (ERA) number (not necessarily required). No action to repair or examine the meter will be done, until a valid declaration of decontamination has been received.

Contact information

Company Name:

Company Address:

Contact Person:

Name:

Phone:

Email:

Meter information

Type:

Id. no.:

Serial no.:

Reason for return (e.g. calibration, repair). Please describe in detail.

Contamination information

The meter was contaminated with:

- ☐ poisonous
- ☐ hazardous
- ☐ explosive
- ☐ corrosive, irritant
- ☐ oxidizing
- ☐ environmental hazardous
- ☐ flammable
- ☐ cancer-causing, harmful
- ☐ other:

The meter was cleaned with:

Packaging and shipping Instructions

- Remove all cables, connectors, separate filters and mounting materials
- Please pack each item in two suitable sealed protective foil bags
- Transport in suitable shipping package (e.g. original Bopp & Reuther Messtechnik shipping package)
- Include a copy of this declaration form along with the shipping documents on the outside

By signing this form, you are accepting the full responsibility for its contents and confirming that appropriate decontamination has taken place in accordance with legal regulations.

Print name: **Date:**

Legally valid signature:

D. Certificates

D.1. Explosions protection certificates

D.1.1 PV11: EC type examination certificate DMT 00 ATEX E 063 X

see Homepage: https://www.bopp-reuther.com/en/download/ EC Type Ex-Approvals Bopp & Reuther Messtechnik

D.1.2 Slot-type initiators SJ (AG 19/20 und IG2): EC-Type-Examination Certificate PTB 99 ATEX 2219 X

see Homepage: https://www.bopp-reuther.com/en/download/ EC Type Examination Certificate foreign companies

D.2. EU- Declaration of conformity

BOPP & REUTHER MESSTECHNIK

EU - Konformitätserklärung
EU - Declaration of conformity
UE - Déclaration de conformité

Hiermit erklärt der Hersteller in alleiniger Verantwortung, dass die nachfolgend bezeichnete Baueinheit den Anforderungen der zutreffenden EU-Richtlinien entspricht. Bei nicht mit uns abgestimmten Änderungen verliert diese Erklärung ihre Gültigkeit.

The manufacturer herewith declares under sole responsibility that the unit mentioned below complies with the requirements of the relevant EU directives. This declaration is no longer valid if the unit is modified without our agreement.

Par la présente, le fabricant déclare sous sa seule responsabilité que les appareils décrits ci-dessous, correspondent aux exigences de la réglementation UE qui les concerne. Toute modification des appareils sans notre accord entraine la perte de validité de cette déclaration de conformité

Hersteller *Manufacturer* Fabricant	Bopp & Reuther Messtechnik GmbH Am Neuen Rheinhafen 4 D-67346 Speyer
Bezeichnung *Description* Description	Ovalradzähler *Ovalwheel meter* Compteur à roues ovales
Typ, Modell *Type, model* Type, modèle	OI / OUI / OaP / OUaP / OK / OP mit *with* avec UST, AG, MFE, IG, SE, KSE, KSN, NK

Richtlinie *Directive* Directive	2014/30/EU /UE L 96/79 Elektromagnetische Verträglichkeit *Electromagnetic interference* Compatibilité électromagnétique
Normen und normative Dokumente *Standards and normative documents* Normes et documents normatifs	EN 61000-6-2:2005 EN 61000-6-3:2012

Richtlinie *Directive* Directive	2014/34/EU /UE L 96/309 Explosionsschutz *Explosion protection* Protection contre les explosions	
Baumusterprüfbescheinigung *Type examination certificate* Certificat d'approbation de type	DMT 99 ATEX E 014 X	USTI
	DMT 00 ATEX E 025 X	USTD
	BVS 04 ATEX E 022 X	USTX
	DMT 00 ATEX E 063 X	AG43-45 (PV11)
	PTB 99 ATEX 2219 X	AG19-20, IG (SJ3,5-N)
	TÜV 15 ATEX 131621 X	AG01-08 (01-08)
	BVS 09 ATEX E 031 X	MFE1-3
	BVS 00 ATEX 2048 X	KSN (NJ1,5-6,5-N)
	EPS 14 ATEX 1766 X	KSE, NK (07-2511)
Notifizierte Stelle *Notified Body* *Organisme Notifié*	BVS, DMT: DEKRA EXAM	0158
	PTB	0102
	TÜV, EPS: Bureau Veritas	0044
Normen und normative Dokumente *Standards and normative documents* Normes et documents normatifs	EN IEC 60079-0:2018	USTI, USTD, USTX, PV11, SJ3,5-N, 01-08, MFE1-3, NJ1,5-6,5-N, 8064/21
	EN 60079-1:2014	USTD, USTX, 01-08, 8064/21
	EN 60079-11:2012	USTI, USTD, USTX, PV11, SJ3,5-N, MFE1-3, NJ1,5-6,5-N
	EN 60079-26:2015	USTI

Bopp & Reuther Messtechnik GmbH, Am Neuen Rheinhafen 4, 67346 Speyer / Germany
Telefon: +49(0)6232 657-0, **Telefax**: +49(0)6232 657-505, **Email**: info@bopp-reuther.com, **Internet**: www.bopp-reuther.com

Z-ML-KE ORZ-OI-OAP-OK-OP-elektrisch-V15 2023-01-30

BOPP & REUTHER MESSTECHNIK

Richtlinie *Directive* Directive	2014/68/EU /UE L 189/164 Druckgeräte *Pressure equipment* Équipements sous pression
Konformitätsbewertungsverfahren *Conformity assessment procedure* Procédures d'évaluation de la conformité	Modul B + Modul C2
Notifizierte Stelle *Notified Body* *Organisme Notifié*	0036 TÜV SÜD Industrie Service GmbH Dudenstraße 28, D-68167 Mannheim
Normen und normative Dokumente *Standards and normative documents* Normes et documents normatifs	AD 2000 Regelwerk *AD 2000 Code* Code AD 2000
Klassifizierung *Classification* Classification	Rohrleitungsteil *Pipe* Tuyauterie
Fluid Kategorie ; Diagramm *Fluid category ; Diagramm* Dangerosité du fluide ; Tableau	Gruppe 1 ; Anhang II / 6 *Group 1 ; Attachment II / 6* Groupe 1 ; Appendice II / 6
Einstufung Druckgerät *Classification équipement sous pression* Classification pressure equipment	Kategorie III *Category III* Catégorie III

Die Angaben zur Richtlinie 2014/68/EU ist nur gültig für Druckgeräte die unter Artikel 4 Absatz 1 und 2 fallen, alle anderen unterliegen der guten Ingenieurspraxis nach Artikel 4 Absatz 3.
The information on Directive 2014/68 / EU is only valid for pressure equipment that falls under Article 4 Paragraph 1 and 2, all others are subject to good engineering practice according to Article 4 Paragraph 3.
Les informations sur la directive 2014/68 / UE ne sont valables que pour les équipements sous pression relevant de l'article 4, paragraphes 1 et 2, tous les autres sont soumis aux bonnes pratiques d'ingénierie conformément à l'article 4, paragraphe 3.

Richtlinie *Directive* Directive	2011/65/EU /UE L 174/88 Beschränkung gefährlicher Stoffe *Restriction of hazardous substances* Limitation de substances dangereuses
Delegierte Richtlinie *Delegated Directive* Directive Déléguée	(EU /UE) 2015/863 L 137/10 Änderung Anhang II der Richtlinie 2011/65/EU *Amending Annex II to Directive 2011/65/EU* Modifiant l'annexe II de la directive 2011/65/UE
Normen und normative Dokumente *Standards and normative documents* Normes et documents normatifs	EN IEC 63000:2018

Ort, Datum / *Place, Date* / Lieu, Date: **Speyer, 2023-01-30**

Dr. J. Ph. Herzog
Geschäftsführer
Managing director / Gérant

i . V. J. Riedl
stv. QM Beauftragter
Deputy QM Officer / Adjoint chargé de la qualité

Bopp & Reuther Messtechnik GmbH, Am Neuen Rheinhafen 4, 67346 Speyer / Germany
Telefon: +49(0)6232 657-0, **Telefax**: +49(0)6232 657-505, **Email**: info@bopp-reuther.com, **Internet**: www.bopp-reuther.com

Z-ML-KE ORZ-OI-OAP-OK-OP-elektrisch-V15 2023-01-30

BOPP & REUTHER
MESSTECHNIK

EU - Konformitätserklärung
EU - Declaration of conformity
UE - Déclaration de conformité

Hiermit erklärt der Hersteller in alleiniger Verantwortung, dass die nachfolgend bezeichnete Baueinheit den Anforderungen der zutreffenden EU-Richtlinien entspricht. Bei nicht mit uns abgestimmten Änderungen verliert diese Erklärung ihre Gültigkeit.

The manufacturer herewith declares under sole responsibility that the unit mentioned below complies with the requirements of the relevant EU directives. This declaration is no longer valid if the unit is modified without our agreement.

Par la présente, le fabricant déclare sous sa seule responsabilité que les appareils décrits ci-dessous, correspondent aux exigences de la réglementation UE qui les concerne. Toute modification des appareils sans notre accord entraine la perte de validité de cette déclaration de conformité

Hersteller *Manufacturer* Fabricant	Bopp & Reuther Messtechnik GmbH Am Neuen Rheinhafen 4 D-67346 Speyer
Bezeichnung *Description* Description	Ovalradzähler *Ovalwheel meter* Compteur à roues ovales
Typ, Modell *Type, model* Type, modèle	OI / OUI / OaP / OUaP / OK / OP mit *with* avec E, D, M5

Richtlinie *Directive* Directive	2014/68/EU /UE L 189/164 Druckgeräte *Pressure equipment* Équipements sous pression
Konformitätsbewertungsverfahren *Conformity assessment procedure* Procédures d'évaluation de la conformité	Modul B + Modul C2
Notifizierte Stelle *Notified Body* *Organisme Notifié*	0036 TÜV SÜD Industrie Service GmbH Dudenstraße 28, D-68167 Mannheim
Normen und normative Dokumente *Standards and normative documents* Normes et documents normatifs	AD 2000 Regelwerk *AD 2000 Code* Code AD 2000
Klassifizierung *Classification* Classification	Rohrleitungsteil *Pipe* Tuyauterie
Fluid Kategorie ; Diagramm *Fluid category ; Diagramm* Dangerosité du fluide ; Tableau	Gruppe 1 ; Anhang II / 6 *Group 1 ; Attachment II / 6* Groupe 1 ; Appendice II / 6
Einstufung Druckgerät *Classification équipement sous pression* Classification pressure equipment	Kategorie III *Category III* Catégorie III

Die Angaben zur Richtlinie 2014/68/EU ist nur gültig für Druckgeräte die unter Artikel 4 Absatz 1 und 2 fallen, alle anderen unterliegen der guten Ingenieurspraxis nach Artikel 4 Absatz 3.
The information on Directive 2014/68 / EU is only valid for pressure equipment that falls under Article 4 Paragraph 1 and 2, all others are subject to good engineering practice according to Article 4 Paragraph 3.
Les informations sur la directive 2014/68 / UE ne sont valables que pour les équipements sous pression relevant de l'article 4, paragraphes 1 et 2, tous les autres sont soumis aux bonnes pratiques d'ingénierie conformément à l'article 4, paragraphe 3.

Bopp & Reuther Messtechnik GmbH, Am Neuen Rheinhafen 4, 67346 Speyer / Germany
Telefon: +49(0)6232 657-0, **Telefax**: +49(0)6232 657-505, **Email**: info@bopp-reuther.com, **Internet**: www.bopp-reuther.com

Z-ML-KE ORZ-OI-OAP-OK-OP-mechanisch-V13 2023-01-30

BOPP & REUTHER MESSTECHNIK

Richtlinie *Directive* Directive	2011/65/EU /UE L 174/88 Beschränkung gefährlicher Stoffe *Restriction of hazardous substances* Limitation de substances dangereuses
Delegierte Richtlinie *Delegated Directive* Directive Déléguée	(EU /UE) 2015/863 L 137/10 Änderung Anhang II der Richtlinie 2011/65/EU *Amending Annex II to Directive 2011/65/EU* Modifiant l'annexe II de la directive 2011/65/UE
Normen und normative Dokumente *Standards and normative documents* Normes et documents normatifs	EN IEC 63000:2018

Ort, Datum / *Place, Date* / Lieu, Date: **Speyer, 2023-01-30**

Dr. J. Ph. Herzog
Geschäftsführer
Managing director / Gérant

i . V. J. Riedl
stv. QM Beauftragter
Deputy *QM Offider* / Adjoint chargé de la qualité

Bopp & Reuther Messtechnik GmbH, Am Neuen Rheinhafen 4, 67346 Speyer / Germany
Telefon: +49(0)6232 657-0, **Telefax**: +49(0)6232 657-505, **Email**: info@bopp-reuther.com, **Internet**: www.bopp-reuther.com

Z-ML-KE ORZ-OI-OAP-OK-OP-mechanisch-V13 2023-01-30

Notes:

Our product portfolio:

Volume flowmeter:

- Oval wheel meter
- Turbine meter
- Electromagnetic flowmeter

Mass flowmeter:

- Vortex meter
- Compact orifice
- Coriolis mass flowmeter

Density and concentration meter (Measuring and testing equipment)

Dosing measurement technology

- Electromagnetic flowmeter
- Coriolis mass flowmeter
- Oval wheel meter
- Dosing control system

Measurement Accessories

- Processing electronics
- Mechanical indicator
- Pulse pick-ups
- Components

Measuring and testing equipment

Conformity assessment according to MID Directive 2014/32/EU

After Sales Service

Bopp & Reuther Messtechnik GmbH
Am Neuen Rheinhafen 4
67346 Speyer
Germany
Phone: +49 6232 657-0
Fax: +49 6232 657- 505
Email: info@bopp-reuther.com
https://www.bopp-reuther.com

BOPP & REUTHER
MESSTECHNIK