BOPP & REUTHER
MESSTECHNIK

Dosing meter
with quantity presetting
with valve

OK Series
M5uVm4

Operating Manual

Bopp & Reuther
Messtechnik GmbH
Am Neuen Rheinhafen 4
67346 Speyer
Germany

Phone : +49 6232 657-0
Fax: +49 6232 657-505
info@bopp-reuther.com
www.bopp-reuther.com

A-EN-01241-00Rev.F
04/2023

Table of Contents

Foreword

I. Transport, Delivery, Storage

Always protect devices against humidity, soiling, impacts and damages

Delivery Inspection:

Check the delivery for completeness upon receipt. Compare the device data with the data on the delivery note and in the order records.

Report any in-transit damage immediately. Damage reported at a later date shall not be recognized.

II. Warranty

Please refer the contractual terms and conditions relating to delivery for the scope and period of warranty.
Warranty claims shall be conditional to correct installation and commissioning in accordance with the operating instructions of the device. The necessary installation, commissioning and maintenance work should only be carried out by qualified and authorized personnel..

III. General safety instructions

1. Oval Wheel Meters are reliable, high accurate volumetric measuring devices. They should only be used for their intended purpose. Always observe the pressure and temperature limits stated on the type plate, as well as all other technical data and safety information during device installation, start-up and operation.
2. Always observe national and international regulations concerning the operation of devices and systems under pressure.
3. Prior to installation, the operator has to ensure that the pressure bearing parts have not been damaged during transportation.
4. The devices have to be installed, operated and serviced by qualified personnel. The operator has the responsibility to ensure that the personnel have received sufficient and appropriate training. In cause of doubt, please contact the manufacturer.
5. The operator must ensure that the materials used (wetted parts) of the device compared with the measured liquid are chemically resistant.
6. The gaskets or sealing elements must be handled with care according to the operating instructions.
7. The tightening torques for the screw connections at the cover and lower part of the housing, as well as for the flange connections in the pipework are available on request.

IV. Basic Safety Information

Description of Symbols:

	IMPORTANT NOTES! Please consider these notes carefully to achieve a reliable functional system. The accompanying text contains important information about the product, handling the product or about a section of the document that is of particular importance.

	WARNING! Failure to take the prescribed precautions could result in death, severe bodily injury, or substantial material / product damage.

V. Intended Use

This flowmeter of series OP is designed to measure the volume of liquids such as gasolines, heating oils, lubricating oils, diesel oil, bio ethanol and other chemical liquids.

Intended User
The intended user is not a general purpose user.

	The intended user is not allowed to open, manipulate or dismantle the device. The device may be maintained, serviced or opened only by dedicated and qualified service personnel.

1. Identification

Manufacturer Bopp & Reuther Messtechnik GmbH
Am Neuen Rheinhafen 4
67346 Speyer, Germany
Phone: +49 6232 657-0
Fax: +49 6232 657-505

Type of product: Direct volumetric meter (positive displacement meter) with dosing facility

Product name: Dosing meter OK with a roller counter M5uVm4 and mechanical shut-off valve
Version no.: A-EN-01241-00F

2. Area of Application

Dosing meters of this type are used for the automatic dosage of all types of chemical liquids, such as solvents, resins, paints and lacquers, alkaline solutions, organic and inorganic acids, depending on the temperature and concentration.

3. Principle of Operation and System Design

3.1 Measuring principle

Oval Wheel Meter belongs to the group of direct volumetric meters for liquids with movable partition walls (displacement flow meters).
The Oval Wheel Meter consists of measurement chamber housing with two pivoted oval wheels which are toothed and roll off each other in counter-rotations.
The diagram displays oval wheel movement during the measurement process.

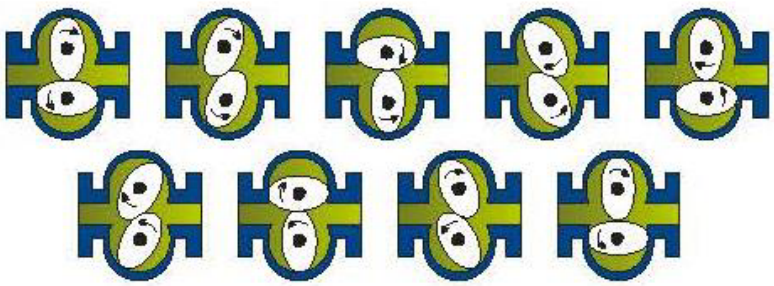

Each revolution the oval wheels displaces a discrete volume of liquid (defined by the space between the oval wheel and measurement chamber) through the chamber.

The rotation of the oval wheel meter is transferred to a mechanical counter and/or a pulse pick-up via a magnetic coupling and gearing for measurement purposes.

3.2 System design

Dosing meters consist of the following components:

Sensor:
Measured value recording occurs via OI series oval wheel meters.

Quantity setting device keypad M5uVm4:
5-digit integrated quantity setting device keypad with mechanical stop mechanism for 4-step closing of the shut-off valve incl. a 5-digit resettable roller counter (digit height 19 mm) and an 8-digit non-resettable roller sum meter.

Valve:
Mechanical shut-off valve, controlled via a quantity setting device keypad M5uV.

Optional pulse pick-up type IG1 or IG2
With a pulse pick-up the measured flow rate can be transferred to electronic evaluation electronics (e.g. counters, PLC …) via a pulse output. There are two versions available:

- IG1 single channel
- IG2 dual channel, 90° phase angle ±10°.

Optional zero contact switch NK:
Integrated zero contact NK, which switches at the beginning and end of the measuring process (e.g. pump …)

Optional coupling switch KS (electric):
This accessory is used as a signal transmitter for the operating status of the roller counters. There is an electrical signal between the "red" and "green" marks (reading, pressure and zero setting) during the entire period.

- KSN: Proximity switch according to NAMUR
- KSE: Micro limit switch

4. Input

4.1 Measured variable

Volumes

4.2 Measuring range

Type	Size	Dyn. viscosity [mPa·s]	0.3 – 1.5 [l/min]	1.5 – 150 [l/min]	150- 300 [l/min]	300 - 1000 (ball bearing) [l/min]
OK5	25	min.	3	3	2.5	2.5
		max.	50	50	25	25
		Cont.operation	33	33	25	25
OK10	25	min.	10	10	7	8
		max.	100	100	70	80
		Cont.operation	66	80	70	80
OK50	50	min.	30	30	18	15
		max.	300	300	180	200
		Cont.operation	200	240	180	200
OK100	50	min.	66	66	48	-----
		max.	500	500	480	-----
		Cont.operation	440	500	480	-----

The values in the table are general nominal ratings. The exact range depends on the measured media, viscosity and type of meter and is listed in the data sheet.
For viscosities of >150mPa·s the meters are equipped with special toothed oval wheels (except OK 5).

5. Output

5.1 Pulse pick-up, switching contacts

Pulse pick-up type IG 2 (2 channels)

Two slotted proximity switches in connection with a flag disc (10 discs) form the pulse pick-up system with intrinsically safe control circuit according to NAMUR. It is installed in the meter housing, driven by the coupling gear and has a return stop which prevents pulses during reverse motion of the meter.
One pulse is released per pick-up for each dash line of the fastest moving digit roller in the M5. Both pulses are released in a shifted phase (90°).
The pulse value is 1/100 of the rotation value of the fastest moving digit roller.

Coupling switch type KS (electric):
On request, it is also possible to install a coupling switch KS, designed as a proximity switch according to Namur. The connecting pipe has to be connected to the terminal box on the rear panel of the housing.

This auxiliary component is used as a signal transmitter for the operating status of the roller counters. There is an electrical signal between the "red" and "green" marks (reading, pressure and zero setting) during the entire period.

Coupling switch KSE: Micro limit switch, Ex I 2G Ex d IIC T6 or Ex II 2G Ex ia IIC T6, 250 V ~ 7 A, 250 V-0.5 A. Installation in the housing on the right-hand side plate of the M5 roller counter, actuated by the decoupler.
If desired, a proximity switch (KSN, ex intrinsically safe) can also be provided.

M5 roller counter

Basic type	Roller counter M5					Resettable printer B		Quantity setting device V	
	Resettable roller counter			Roller sum meter					
	Final status	Starting roller 1 rotation	Starting roller smallest division	Final status	Smallest readable quantity	Final status	Printer resolution	Setting level	max. setting quantity
OK 5	9999.9 ℓ 99999 ℓ	1 ℓ 10 ℓ	0.01 ℓ 0.1 L	9999999.9 ℓ 99999999L	0,1ℓ 1 ℓ	9999.99 ℓ 99999.9 L	0.01 ℓ 0.1 ℓ	0.1 ℓ 1 ℓ	9999.9 ℓ 99999 ℓ
OK 10 OK 50	99999 L	10 ℓ	0.1 ℓ	99999999 ℓ	1 ℓ	99999.9 ℓ	0.1 ℓ	1 ℓ	99999 ℓ
OK 100	999.99 m³	0.1 m³	0.001 m³	999999.99 m³	0.01 m³	999.999 m³	0.001 m³	0.01 m³	999.99 m³

5.2 Electrical and thermal safety relevant data
See Appendix EC Type Examination Certificates

6. Characteristic Parameters

6.1 Reference conditions

Calibration of the oval wheel meters occurs at test benches whose accuracy is based on national standards.
Pressure: 2 to 7 bar
Temperature: +20°C to +30°C

6.2 Tolerated deviation
± 0.3 % o.M.

6.3 Repeatability
< 0.1 %

6.4 Influence of the ambient temperature
< 0.00 5% / °C

6.5 Influence of the media temperature
Depends on the viscosity of the measured media.

7. Operating Conditions

7.1 Installation conditions

7.1.1 Installation instructions

	The operating instructions must be read and observed before assembly and commissioning. The system must be **depressurized** and **cooled down** before assembly and disassembly of the device.

7.1.1.1 General information

- Bopp & Reuther Oval Wheel Meters are precision flow meters. Inlet and outlet are covered with protective caps against foreign substances. Remove caps shortly before putting the device into operation.
- Observe the operating data marked on the oval wheel, the order confirmation and the configuration data sheet. If you want to use the device under differing operating conditions, consult Bopp & Reuther Messtechnik GmbH indicating the factory number.
- Install the Oval Wheel Meter in the pressure pipe behind the pump (approximately 3 m liquid column pressure drop for nominal flow rate).
- Install the Oval Wheel Meter in such a way, that it remains filled with liquid also in non-operating condition.
- To avoid measuring inaccuracies due to gas bubbles or contamination, preventive measures must be taken (e.g. gas separator or strainer).

7.1.1.2 Installation

- Remove any impurities from the pipework. For this task, install a fitting part instead of the oval wheel meter and flush the pipe.
- Only remove the protective caps at the oval wheel meter input and output ports immediately prior to installation. Prevent any impurities entering the device during installation.
- The arrows on the oval wheel meter housing indicate the direction of flow.
- The oval wheel meter display has to be inclined at an angle of approx. 20° towards the rear to ensure that the oval wheel axles are horizontal, irrespective of the position of the pipework.
- Install the oval wheel meter strain-free into the pipework.

The dosimeter type OK can be installed together with the pulse pick-up (series IG1/IG2) and the switches in areas with an explosive atmosphere according to the following specifications.

Pulse pick-up type IG1/IG 2:	Ex II 2G Ex ia IIC T6
Coupling switch type KSE:	Ex II 2G Ex d IIC T6
Coupling switch type KSN:	Ex II 2G Ex ia IIC T6
Zero contact type NK	Ex II 2G Ex d IIC T6

The EMC protection can only be guaranteed with shielded wires. The shielding has to be applied in the metal PG connecting bolts.

7.1.1.3 Measuring assembly

Dosimeters are suitable for horizontal installation in pipeworks for flows from left to right or from right to left. The basic direction of flow for the device is specified on the housing of the oval wheel meter. (For modifying the direction of flow please refer to section 6). The metrological installation of a complete facility can be seen in the following assembly example, Figure 2. As shown, each oval wheel meter should be protected against impurities, which can damage the calculation unit, via an upstream strainer.

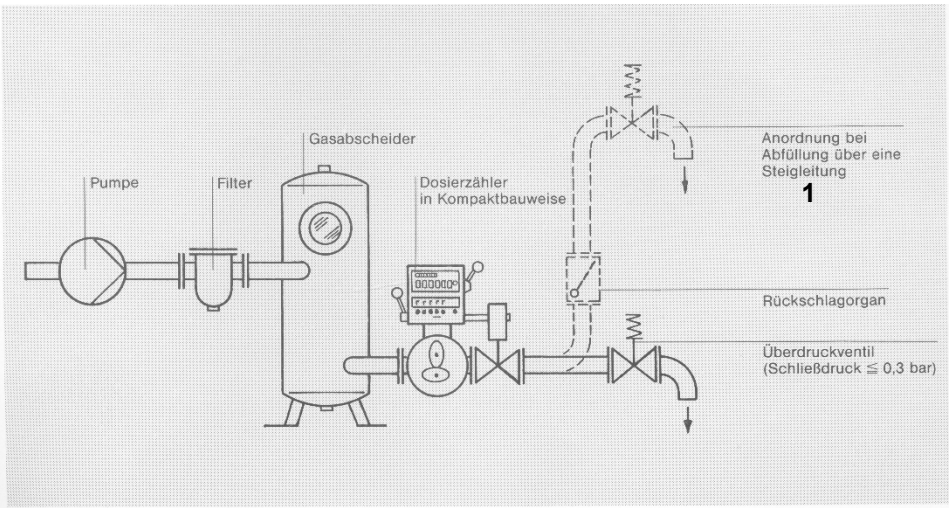

Pumpe	Pump
Filter	Strainer
Gasabscheider	Gas separator
Dosierzähler in Kompaktbauweise	Compact dosimeter
Anordnung bei Abfüllung über eine Steigleitun	Assembly for filling via a riser
Rückschlagorgan	Check valve
Überdruckventil (Schließdruck ≤ 0,3 bar)	Overpressure valve (closing pressure ≤ 0.3 bar

Assembly example for a measuring facility with dosimeter

Furthermore, it has to be ensured that the liquid is supplied to the dosimeter free of air or trapped gas, since these are volumetrically recorded the same as the liquid, thus providing incorrect measuring results. If this danger exists, appropriate gas or air separating facilities have to be provided. Strainers and gas separators suitable for each nominal width are available from our production range.

Note:

When filling (see figure upper mark 1) via a riser, it has to be positioned in a way that ensures that the pressure behind the mechanical shut-off valve (also after switching off the pump) is not more than 0.3 bar above the pressure in front of the valve. If a greater riser height is required or if for other reasons the pressure difference at the mechanical shut-off valve in the direction of reverse current exceeds 0.3 bar, a check valve has to be installed.

7.1.1.3 Changing the direction of flow

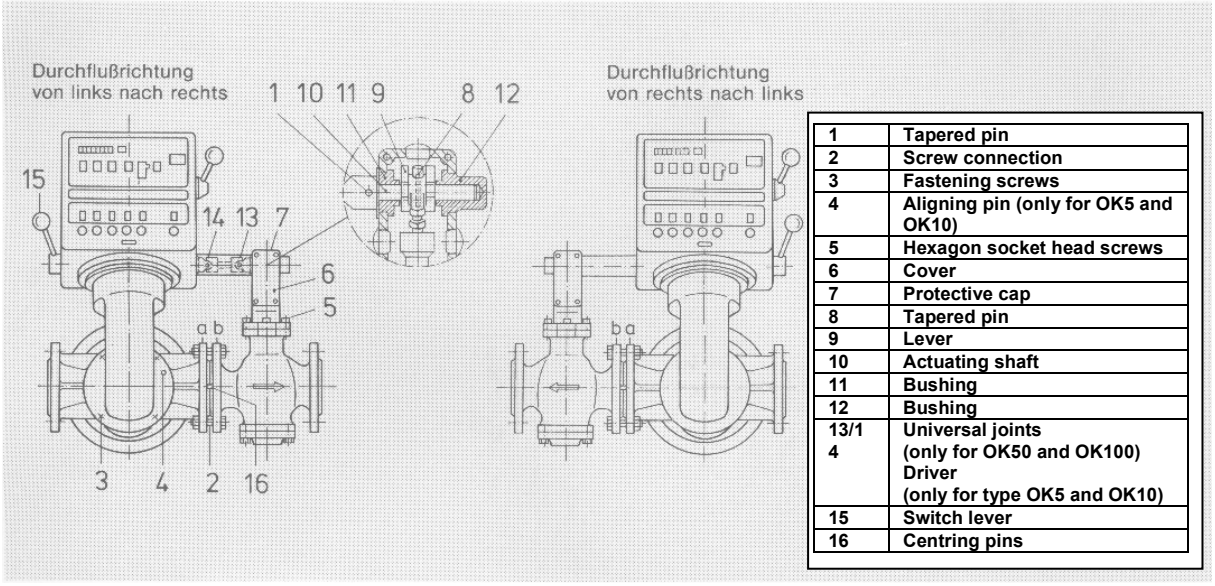

1	Tapered pin
2	Screw connection
3	Fastening screws
4	Aligning pin (only for OK5 and OK10)
5	Hexagon socket head screws
6	Cover
7	Protective cap
8	Tapered pin
9	Lever
10	Actuating shaft
11	Bushing
12	Bushing
13/1 4	Universal joints (only for OK50 and OK100) Driver (only for type OK5 and OK10)
15	Switch lever
16	Centring pins

Dosimeter, measuring assembly for various directions of flow

Durchflussrichtung von links nach rechts	direction of flow from left to right
Durchflussrichtung von rechts nach links	direction of flow from right to left

Carry out changes as follows:

1. Remove the tapered pin (1)
2. Loosen the screw connection (2) between the valve and meter and remove the valve
3. Remove the fastening screws (3) (with type 0K5 and 0K10 drive out the aligning pin (4) from the rear), rotate the oval wheel meter by 180° so that the direction of flow arrow on the meter housing is pointing in the desired direction of flow.
4. Reinsert and tighten the fastening screws (3).
5. Remove the hexagon socket head screws (5) and separate the upper part of the valve from the bottom part.
6. Remove the cover (6) from the front of the upper part of the valve, remove the protective cap (7), press the tapered pin (8) out of the lever (9) and extract the actuating shaft (10).
   Caution: Levers with spindle fall out!
7. Exchange the bushings (11 and 12), place the lever (9) with spindle between the bushings (11 and 12) and install the actuating shaft (10) so that the end of the shaft is positioned with the bore hole for the universal joint or driver (13/14) in the large bushing (12).
8. Pin the actuating shaft (10) to the lever (9) and insert the protective cap (7).
9. Place and screw the upper part of the valve onto the lower part so that the cover opening is facing the front.
10. Exchange the universal joints or driver (13 and 14) and engaging lever (15) at the meter head
11. Screw the valve to the output side of the meter. Caution! According to the figure flange a to flange b. Place the universal joint or driver on the shaft end of the valve.
12. By loosening the fastening screws (3) and turning the meter head it is possible to adjust the position of the meter head to the valve.
13. Drill and pin the universal joint or driver (13) to the shaft end of the valve.
14. Drill the hole for the aligning pin (4) and drive in the aligning pin (only for type OK5 and OK10).
15. Reattach the cover (6) to the front of the upper part of the valve.

7.1.2 Start-up conditions

Important

- **Start up the oval wheel meter with a gradually increasing the flow rate.**
- **In measuring systems for viscous liquids which require heating, switch on the heating system of the oval wheel meter, strainer and pipework in sufficient time prior to start-up, subsequently start up the device with a gradually increasing flow rate.**

Type plate with pressure relevant information

Additional type plate at the connection flange with CE0036 mark
The used abbreviations have the following meaning:
PT: Achieved test pressure and test date

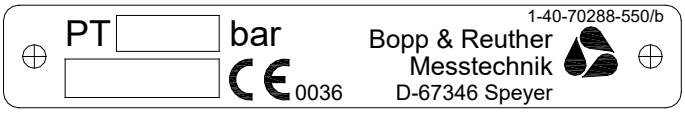

7.2 Ambient conditions

7.2.1 Ambient temperature

-20°C to +60°C

7.2.2 Storage temperature

-20° C to +70° C

7.2.3 Degree of protection

IP54 in accordance with IEC 529 / EN 60529

7.2.4 Electromagnetic compatibility

Only applies for devices with pulse pick-ups:

DIN EN 61000-6-2; DIN EN 61000-6-3

The "electromagnetic compatibility" is only guaranteed when the electronics housing is closed.

7.3 Process conditions

7.3.1 Liquid temperature

Depending on the version -10°C to +60°C, higher temperatures on request

7.3.2 State of aggregation

Suitable for liquids

7.3.3 Viscosity

0.3 -1000 mPa·s

7.3.4 Liquid temperature limit

60°C (higher temperatures on request)

7.3.5 Liquid pressure limit

OK 5	OK 10	OK 50	OK 100
PN10	PN10	PN6	PN6

	At temperatures higher than 50°C the maximum pressure must be reduced according to the nominal pressure according to the tables "Pressure/temperature assignment" of the flange standard DIN EN 1092.

7.3.6 Flow rate limit

All details in l/min

OK 5	OK 10	OK 50	OK 100
50	100	300	500

7.3.7 Pressure loss

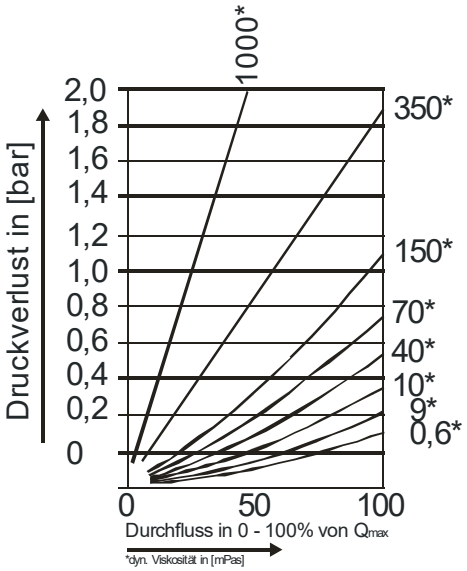

Pressure loss in [bar]
Flow rate in 0 – 100% of Q_{max}
*Dyn. viscosity in [mPa·s]

8. Constructive Design

8.1 Model/Dimensions

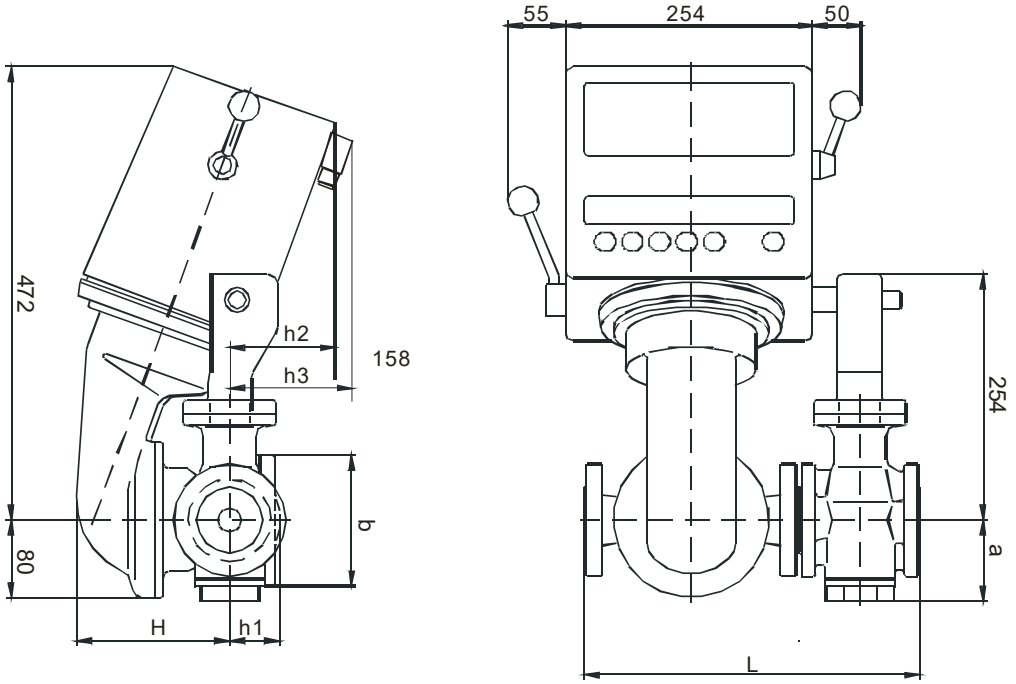

Type	DIN/ANSI	DN	L	H	h1	h2	h3	b	a	Weight
OK 5	**DIN ANSI 150**	**25**	**345**	**158**	**52**	**110**	**142**	**135**	**84**	**18**
OK 10	**DIN ANSI 150**	**25**	**345**	**160**	**72**	**108**	**140**	**150**	**84**	**36**
OK 50	**DIN**	**50**	**500**	**178**	**106**	**90**	**122**	**235**	**97**	**56**
OK 50	**ANSI 150 ANSI 300**	**50**	**530**	**178**	**106**	**90**	**122**	**235**	**97**	**upon request**
OK 100	**DIN ANSI 150**	**50**	**570**	**225**	**146**	**43**	**75**	**290**	**97**	**upon request**
OK 100	**ANSI 300**	**50**	**590**	**225**	**146**	**43**	**75**	**290**	**97**	**upon request**

All dimension details in mm, weight in kg

8.2 Weight

see 8.1

8.3 Materials

Available materials

	OK 5	OK 10	OK 50	OK 100
Housing	Bronze Cast iron Cast steel CrNiMo	Bronze Cast iron Cast steel CrNiMo	Bronze Cast iron Cast steel CrNiMo	Cast steel CrNiMo
Oval wheels	Cast iron Bronze CrNiMo	Cast iron Bronze CrNiMo	Cast iron Bronze CrNiMo	Cast iron CrNiMo
Bearing	Hard graphite ball bearings	Hard graphite ball bearings	Hard graphite ball bearings	Hard graphite

Meaning of the material coding

	A 4		G 1		G 2			F 5		F 57	
	Bronze	Hard	Cast iron	Hard	Cast steel	Cast iron	Hard	CrNiMo	Hard	CrNiMo	Ball bearings
Housing	•		•		•			•		•	
Oval wheels	•		•			•		•		•	
Measuring chamber cover	•		•			•		•[1]	•	•	
Sliding disc							•		•		
Bearings		•		•			•		•		•

1) CrNiMo measuring chamber cover not required for nominal widths < DN 50

8.4 Process connection

Flange DIN, ANSI 150 and ANSI 300

(Others available on request)

8.5 Electrical connection

The electrical connections are located inside the terminal box.

Control line	max. up to 50 Ohm/wire 2-wire, shielded
Cable gland	M 20x1.5

ATTENTION!
When installed in areas with potentially explosive atmosphere observe the respective country's specific regulations (for Germany: EN 60079-14 or VDE 0165).

8.5.1 Type plates of the pulse pick-up and signal transmitter

Pulse pick-up IG1:

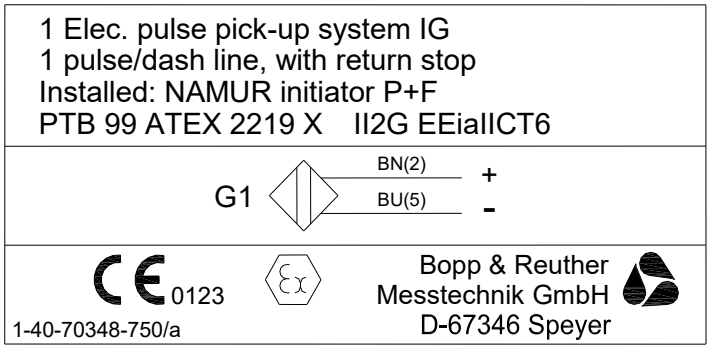

Pulse pick-up IG2

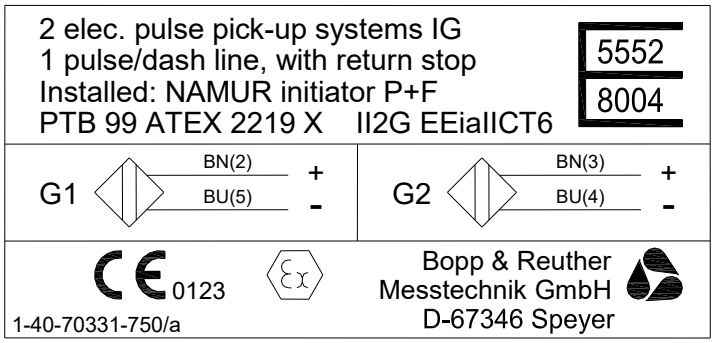

Electrical zero contact NK:

Elektr. Nullkontakt NK	Elec. zero contact NK
Kleingrenztaster	Micro limit switch
Typ 8064/21 Fa. Stahl	Type 8064/21 Stahl
2,5 A	2.5 A
0,5 A	0.5 A

Electrical coupling switch KSE:

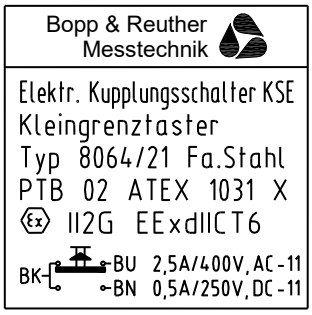

Elektrischer Kupplungsschalter KSE	Elec. coupling switch KSE
Kleingrenztaster	Micro limit switch
Typ 8064/21 Fa. Stahl	Type 8064/21 Stahl
2,5 A	2.5 A
0,5 A	0.5 A

Electrical coupling switch KSN (proximity switch according to NAMUR):

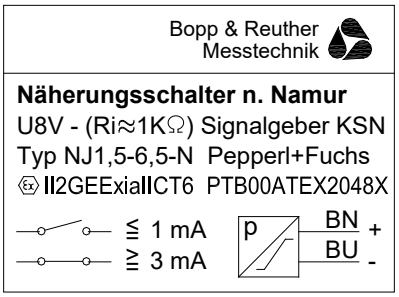

Näherungsschalter n. NAMUR	Proximity switch acc. to NAMUR
Signalgeber:KSN	Signal transmitter:KSN

9. Display and Operation

9.1 Mechanical display

Roller counter M5

The device is equipped with a five-digit roller set, which counts and displays the unit of measure. A sixth number roller is hidden by a cover. After the measurement has been completed and the zeroing lever has been actuated, the cover opens and the value after the dash of the fifth number roller is shown at this position as a digit. Once the measured value has been read, the zeroing lever is once again operated. The digit rollers are reset to zero and the sixth digit is recovered. The device is ready for a new measurement. An eight-digit sum meter, which cannot be zeroed, adds all the values displayed on the roller set in a parallel process.

The attachment of the presetting device allows the presetting and delivery of a max. five-digit quantity. It is attached to the roller counter M5 described below. Quantity entering is carried out via the buttons after actuating the zeroing lever (red marking). The setting level always corresponds to one-tenth of the cycle value of the fastest moving digit roller in the roller counter M5. The set value remains during the delivery. Switching off occurs in four stages with the numerical values 20, 10, 3 before reaching the set quantity, as well as the 0 as the end stage.

Printer

This device is used where a receipt is required in addition to the display of the delivered quantity. After the quantity has been delivered, the zeroing lever is actuated. The sum for the quantity in the roller counter is now transferred to the printer and printed onto the inserted receipt. Zeroing of the combination device is also carried out after actuating the zeroing lever. The zeroing lever is locked during the aforementioned function sequence.

9.2 Operation

9.2.1 Operation of the roller counter

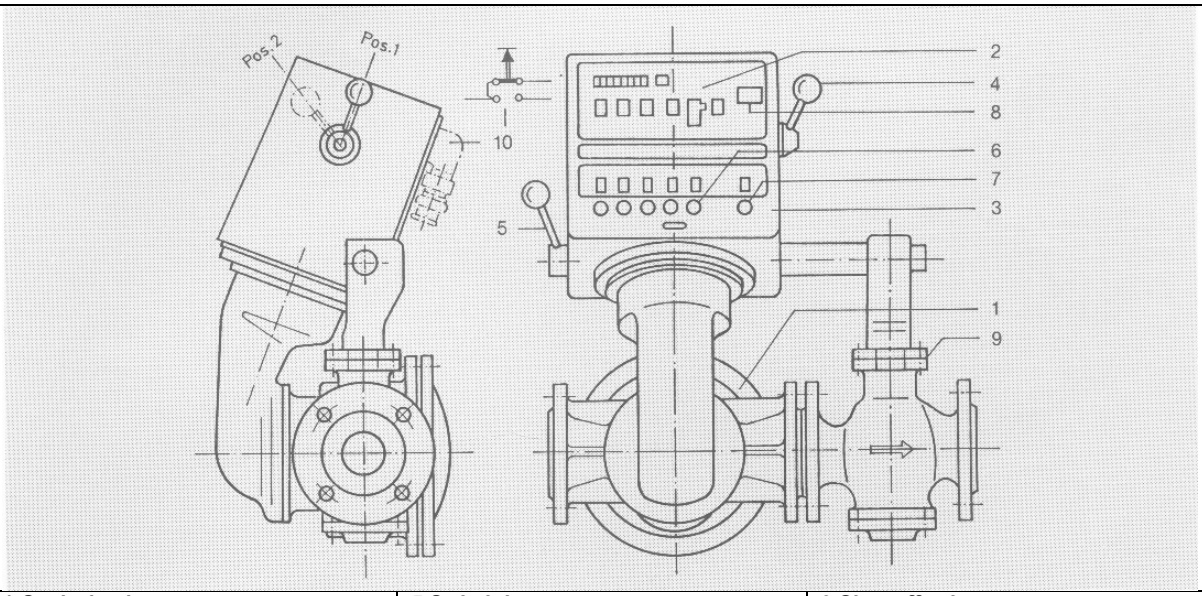

1 Oval wheel meter **2 Resettable roller counter M5u with roller sum meter** **3 Quantity setting device Vm4** **4 Reset and operating lever**	**5 Switch lever** **6 Quantity setting button with respective figure rollers** **7 "STOP" button (red)** **8 Operating state display (green marking: ready for counting, red marking: not ready for counting)**	**9 Shut-off valve** **10 Zero contact NK (possible special facility for signalling, controlling, etc.)**

1. The spring of a spring device is tensioned by turning the operating lever (4) from Pos. 1 to the front to Pos. 2. If the lever is turned back to its original position (Pos. 1) the spring device releases energy and drives a radial cam. A red marking appears in the window (8). The device is not ready for operation.
2. In this setting the desired quantity can be entered via the pushbuttons (6) on the quantity setting device.
3. Further actuation of the operating lever (4), i.e. from Pos. 1 to Pos. 2 and back again to Pos. 1, stores the preset values in the presetting counter and zeroes the five-digit roller counter (2). The marking in the window (8) changes to green. The device is ready for operation.
4. Switch on the device by pulling the switch lever (5) towards the front. It remains in this position for the duration of the measurement and returns to its original position when switching off.
5. After reaching the set quantity, the device switches off automatically. The closing process of the attached shut-off valve occurs in four stages. Please observe the following when zeroing the roller counter (2) and when repeating the set quantity: a) Repetition of the same measuring process. Operation as described in points 1, 3 and 4. b) Setting of another quantity. Operation as described in points 1 and 2.
6. Interruption of the measuring process a) Pressing of the red button (7) "STOP" can prematurely interrupt the measuring process. b) Continuation of the measuring process occurs after actuating the switch lever (5) towards the front as described in point 4. c) Zeroing can be carried out after an interruption. Proceed as described in point 1 and 3.
7. Incorrectly set quantity. If an undesired quantity has been set, set other numerical values as described in point 1, 2 and 3.

9.2.2 Setting the valve lift

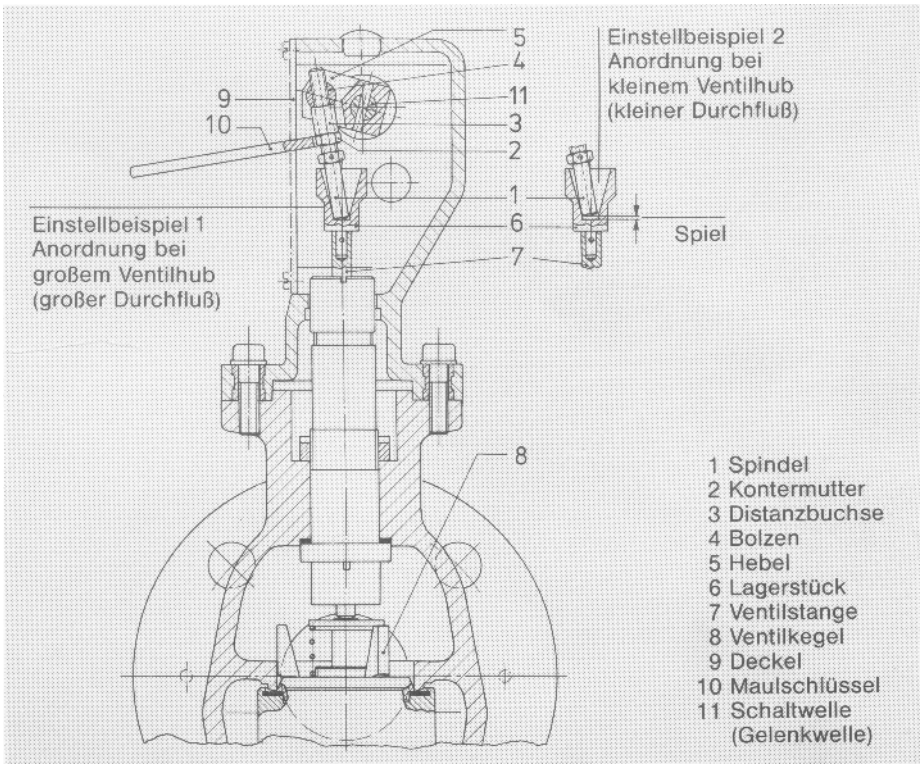

1	**Spindle**
2	**Counternut**
3	**Spacer**
4	**Bolt**
5	**Lever**
6	**Bearing unit**
7	**Valve rod**
8	**Valve cone**
9	**Cover**
10	**Spanner**
11	**Actuating shaft (universal joint shaft)**

Einstellbeispiel 1	Setting example 1
Anordnung bei großem Ventilhub (großer Durchfluss)	Assembly for large valve lift (large flow rate)
Einstellbeispiel 2	Setting example 2
Anordnung bei kleinem Ventilhub (kleiner Durchfluss)	Assembly for small valve lift (small flow rate)
Spiel	Play

General
The flow rate in the last pre stage shut off is set during the factory test to ensure that 20 to 25 % of the max. flow rate of the oval wheel meter is achieved. However, this throttled flow rate depends to a large degree on the respective operating conditions in the measuring system (e.g. the manometric pressure of the pumps, the viscosity of the liquid and, possibly, strongly varying temperatures). The factory set lift can be modified for altered operating conditions or if adjustments are required for a desired flow rate in the last pre stage shut off. This is achieved by a spindle (1) secured via a counternut (2). Setting examples are based on Figure 3.

Assembly and functioning of the setting device
When the valve is closed, the play between the spindle (1) and the bearing unit (6) can be increased or decreased after loosening the counternut (2). If, as shown in example 1, there is hardly any play between the spindle (1) and the bearing unit (6), the valve cone (8) is immediately pressed downwards when opening the valve. This means that the valve is comparatively wide open in the last pre stage shut off, i.e. there is a large flow rate. Contrary to this, the play between the spindle (1) and bearing unit (6) can be increased as shown in example 2. In this position a return stroke of the spindle (1) occurs when the valve is opened without the valve rod (7) and the valve cone (8) being pressed downwards. The valve cone is only pressed downwards and the valve opened if the spindle (1) is in the bearing unit (6) in the further switching range. This means that only a small lift is set in the last pre stage shut off, i.e. there is a small flow rate. The play between the two positions according to example 1 and 2 enables you to vary the opening cross section at the valve cone (8) in the last pre stage shut off and thus also the flow rate between certain limits. For the setting according to example 1 please ensure that the closed valve cone (8) does not exert pressure from the spindle (1) onto the bearing unit (6).

Setting the valve lift
Carry out the setting as follows:

1) Close the valve (press the red stop button)
2) Remove the cover (9)
3) Loosen the counternut (2)
4) Set the play between the spindle (1) and the bearing unit (6)
   (large play – small flow rate, small play – large flow rate in the last pre stage shut off)
5) Retighten the counternut (2)
6) Replace the cover (9)

Appendix

A. Troubleshooting

Oval wheel meters with pulse pick-ups and mechanical counters work maintenance-free.

Please contact our service department with regard to oval wheel meter faults.

Bopp & Reuther Messtechnik GmbH
Service
Am Neuen Rheinhafen 4
67346 Speyer, Germany
Phone: +49 6232 657-420
Mob.: +49 15115233023
Fax: +49 6232 657 561
Email: service@bopp-reuther.com

	**WARNING!** When working on electrical connections observe local regulations and all safety instructions in the operating manual.

	**WARNING!** When using devices in explosion-proof areas always observe the specifications and regulations regarding explosion protection contained in the documentation. Possible faults and their remedies are described below.

General:

If the fault cannot be detected, please contact the service department of Bopp & Reuther Messtechnik GmbH or return the device for repair work to Bopp & Reuther Messtechnik GmbH (see Appendix B2).

B Maintenance, Cleaning, Changing the Indicators

B.1 Maintenance, Cleaning

If the oval wheel meter is to be shut down for a longer period, it should be de-installed and cleaned thoroughly. Cover the input and output ports with protective caps. Ensure that the oval wheel meters are stored in a dry room.

If the oval wheels are to be removed, position and mesh the oval wheel meters so that the marking points (M) on the end face are placed above each other during assembly. Check by manually rotating the wheels once. Ensure that the gasket is inserted correctly.

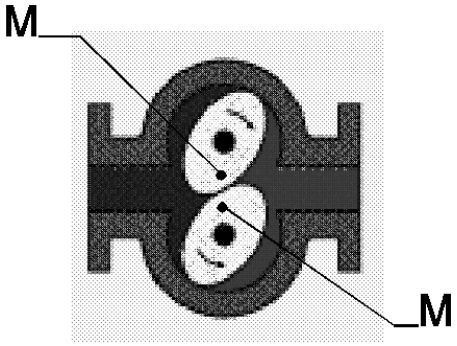

B.2 Repairs, Hazardous Substances

The following measures have to be carried out before to sending the oval wheel meter to Bopp & Reuther Messtechnik GmbH for repairs:

- Always enclose a note with the device which describes the fault, the application as well as the chemical and physical properties of the measured medium (see Appendix).
- Remove any residual liquid. Carefully check gasket grooves and slots in which residual liquid may be trapped. This is extremely important if the liquid is classed as a risk to health, e.g., corrosive, poisonous, carcinogenic, radioactive, etc.

Costs for disposal or personal inquires (burns, etc.) due to incorrect cleaning shall be borne by the operator.

C. Declaration on Decontamination

Bopp & Reuther Messtechnik GmbH
Am Neuen Rheinhafen 4
67346 Speyer
Germany

BOPP & REUTHER MESSTECHNIK

Telephone: +49 (0) 6232 / 657 420
Fax: +49 (0) 6232 / 657 561
Mail: service@bopp-reuther.com
Web: www.bopp-reuther.com

ERA number:

DECLARATION ON DECONTAMINATION OF METERS AND COMPONENTS

Please complete this form and return in advance by email or by Fax to +49(0)6232 / 657 561 in order to receive an Equipment Return Authorisation (ERA) number (not necessarily required). No action to repair or examine the meter will be done, until a valid declaration of decontamination has been received.

Contact information

Company Name:

Company Address:

Contact Person:

Name:

Phone:

Email:

Meter information

Type:

Id. no.:

Serial no.:

Reason for return (e.g. calibration, repair). Please describe in detail.

Contamination information

The meter was contaminated with:

- ☐ poisonous
- ☐ hazardous
- ☐ explosive
- ☐ corrosive, irritant
- ☐ oxidizing
- ☐ environmental hazardous
- ☐ flammable
- ☐ cancer-causing, harmful
- ☐ other:

The meter was cleaned with:

Packaging and shipping Instructions

- Remove all cables, connectors, separate filters and mounting materials
- Please pack each item in two suitable sealed protective foil bags
- Transport in suitable shipping package (e.g. original Bopp & Reuther Messtechnik shipping package)
- Include a copy of this declaration form along with the shipping documents on the outside

By signing this form, you are accepting the full responsibility for its contents and confirming that appropriate decontamination has taken place in accordance with legal regulations.

Print name: **Date:**

Legally valid signature:

D. Certificates

D.1. Explosionsschutz-Zertifikate

D.1.1 Slot-type initiators SJ (IG1, IG2): EC-Type-Examination Certificate PTB 99 ATEX 2219 X

see Homepage: https://www.bopp-reuther.com/en/download/ EC Type Examination Certificate foreign companies

D.1.2 Miniature limit switch (KSE): EC-Type-Examination Certificate PTB 02 ATEX 1031 X

see Homepage: https://www.bopp-reuther.com/en/download/ EC Type Examination Certificate foreign companies

D.1.3 Cylindrical inductive sensors NJ (KSN): EC-Type-Examination Certificate PTB 99 ATEX 2048 X

see Homepage: https://www.bopp-reuther.com/en/download/ EC Type Examination Certificate foreign companies

D.2. Pressure Equipment Directive

ZERTIFIKAT ◆ CERTIFICATE ◆ 認証証書 ◆ СЕРТИФИКАТ ◆ CERTIFICADO ◆ CERTIFICAT

Industrie Service

ZERTIFIKAT

gültig bis: 22.07.2029

CERTIFICATE

valid until: 22.07.2029

EU-Baumusterprüfung (Modul B) - Baumuster - nach Richtlinie 2014/68/EU

EU Type examination (module B) - production type - according to Directive 2014/68/EU

Zertifikat-Nr.: **Z-IS-AN1-MAN-19-07-2681356-23083220**
Certificate No.:

Name und Anschrift des Herstellers: **Bopp & Reuther Messtechnik GmbH**
Name and address of manufacturer: **Am Neuen Rheinhafen 4**
67346 Speyer

Hiermit wird bescheinigt, dass das unten genannte Baumuster die Anforderungen der Richtlinie 2014/68/EU erfüllt.

We herewith certify that the type mentioned below meets the requirements of the Directive 2014/68/EU.

CE 0036

Prüfbericht Nr.: **P-IS-AN1-MAN-19-07-2681356-23083220**
Evaluation report No.:

Geltungsbereich: **Ovalradzähler der Typen OI, OUI, OaP, OuaP, OV, OK, OT, OKT, OF, OR, OC, OP, DN 50 - 400, PN 10 - 100**
Scope of examination:

Fertigungsstätte: **Bopp & Reuther Messtechnik GmbH**
Manufacturing plant: **Am Neuen Rheinhafen 4**
67346 Speyer

Mannheim, 23.07.2019
(Ort, Datum)
(Place, date)

TÜV SÜD Industrie Service GmbH
Zertifizierungsstelle für Druckgeräte

TÜV SÜD Industrie Service GmbH 00 36 Notifizierte Stelle

Ralf Brinkmann

+49 621 395-367

Echtheitsprüfung durch App TÜV SÜD Verify
Verification of Certificate by TÜV SÜD App Verify

Notifizierte Stelle, Kennnummer 0036
Notified Body, No. 0036
TÜV SÜD Industrie Service GmbH
Westendstr. 199
80686 München
GERMANY

Dokument ID: 2681356Y8193f

Seite 1 zum Zertifikat Nr. / Page 1 of the certificate No. Z-IS-AN1-MAN-19-07-2681356-23083220

ZERTIFIKAT ◆ CERTIFICATE ◆ 認証証書 ◆ СЕРТИФИКАТ ◆ CERTIFICADO ◆ CERTIFICAT

Industrie Service

ZERTIFIKAT
Certificate

Konformität mit der Bauart (Modul C1)
nach Richtlinie 97/23/EG
Conformity to Type (Module C1) according to Directive 97/23/EC

Zertifikat-Nr.: **Z-IS-DDB-MAN-15-05-100067376-007**
Certificate No.:
Gültigkeit / *Validity:* 10 Jahre / *10 Years*

Name und Anschrift des Herstellers:
Name and postal address of manufacturer:
Bopp & Reuther Messtechnik GmbH
Am Neuen Rheinhafen 4
D-67346 Speyer

Der Hersteller ist nach Prüfung der Voraussetzungen berechtigt, die von ihm im Rahmen des Geltungsbereichs hergestellten Druckgeräte mit unserer Kennnummer gemäß dem abgebildeten CE-Kennzeichen zu kennzeichnen:
The manufacturer is - after examination of the prerequisites - authorised to provide his pressure equipment manufactured within the scope of the examination our identification number to the CE-mark as illustrate:

CE 0036

Prüfbericht Nr.: **P-IS-DDB-MAN-15-05-100067376-009**
Test report No.:

Geltungsbereich:
Scope of examination:
Durchfluss Messgeräte (Ovalradzähler OI, OUI, OaP, OuaP, OV, OK, OT, Turbinenradzähler RQ, Wirbeldurchflussmesser VTX2, Kompaktblende Oriflow und Oriflow PVDF, Filter (Na, NC, N, Nu)

Fertigungsstätte:
Manufacturing plant:
Bopp & Reuther Messtechnik GmbH
Am Neuen Rheinhafen 4
D-67346 Speyer

TÜV SÜD Industrie Service GmbH
Zertifizierungsstelle
für Druckgeräte

TÜV SÜD Industrie Service GmbH 00 36 Benannte Stelle

Mannheim, 08. Juni 2015
(Ort, Datum)
(Place, date)
Bitte beachten Sie die Hinweise auf der zweiten Seite.
Please note the remarks on the second page..

(Dipl.-Ing. M. John)

Benannte Stelle, Kennnummer 0036
Notified Body, No. 0036
TÜV SÜD Industrie Service GmbH
Westendstr. 199
80686 München
GERMANY

D.3. EU Declaration of Conformity

BOPP & REUTHER MESSTECHNIK

EU - Konformitätserklärung
EU - Declaration of conformity
UE - Déclaration de conformité

Hiermit erklärt der Hersteller in alleiniger Verantwortung, dass die nachfolgend bezeichnete Baueinheit den Anforderungen der zutreffenden EU-Richtlinien entspricht. Bei nicht mit uns abgestimmten Änderungen verliert diese Erklärung ihre Gültigkeit.

The manufacturer herewith declares under sole responsibility that the unit mentioned below complies with the requirements of the relevant EU directives. This declaration is no longer valid if the unit is modified without our agreement.

Par la présente, le fabricant déclare sous sa seule responsabilité que les appareils décrits ci-dessous, correspondent aux exigences de la réglementation UE qui les concerne. Toute modification des appareils sans notre accord entraine la perte de validité de cette déclaration de conformité

Hersteller *Manufacturer* Fabricant	Bopp & Reuther Messtechnik GmbH Am Neuen Rheinhafen 4 D-67346 Speyer
Bezeichnung *Description* Description	Ovalradzähler *Ovalwheel meter* Compteur à roues ovales
Typ, Modell *Type, model* Type, modèle	OI / OUI / OaP / OUaP / OK / OP mit *with* avec UST, AG, MFE, IG, SE, KSE, KSN, NK

Richtlinie *Directive* Directive	2014/30/EU /UE L 96/79 Elektromagnetische Verträglichkeit *Electromagnetic interference* Compatibilité électromagnétique
Normen und normative Dokumente *Standards and normative documents* Normes et documents normatifs	EN 61000-6-2:2005 EN 61000-6-3:2012

Richtlinie *Directive* Directive	2014/34/EU /UE L 96/309 Explosionsschutz *Explosion protection* Protection contre les explosions	
Baumusterprüfbescheinigung *Type examination certificate* Certificat d'approbation de type	DMT 99 ATEX E 014 X	USTI
	DMT 00 ATEX E 025 X	USTD
	BVS 04 ATEX E 022 X	USTX
	DMT 00 ATEX E 063 X	AG43-45 (PV11)
	PTB 99 ATEX 2219 X	AG19-20, IG (SJ3,5-N)
	TÜV 15 ATEX 131621 X	AG01-08 (01-08)
	BVS 09 ATEX E 031 X	MFE1-3
	BVS 00 ATEX 2048 X	KSN (NJ1,5-6,5-N)
	EPS 14 ATEX 1766 X	KSE, NK (07-2511)
Notifizierte Stelle *Notified Body* *Organisme Notifié*	BVS, DMT: DEKRA EXAM	0158
	PTB	0102
	TÜV, EPS: Bureau Veritas	0044
Normen und normative Dokumente *Standards and normative documents* Normes et documents normatifs	EN IEC 60079-0:2018	USTI, USTD, USTX, PV11, SJ3,5-N, 01-08, MFE1-3, NJ1,5-6,5-N, 8064/21
	EN 60079-1:2014	USTD, USTX, 01-08, 8064/21
	EN 60079-11:2012	USTI, USTD, USTX, PV11, SJ3,5-N, MFE1-3, NJ1,5-6,5-N
	EN 60079-26:2015	USTI

Bopp & Reuther Messtechnik GmbH, Am Neuen Rheinhafen 4, 67346 Speyer / Germany
Telefon: +49(0)6232 657-0, **Telefax**: +49(0)6232 657-505, **Email**: info@bopp-reuther.com, **Internet**: www.bopp-reuther.com

Z-ML-KE ORZ-OI-OAP-OK-OP-elektrisch-V15 2023-01-30

BOPP & REUTHER MESSTECHNIK

Richtlinie *Directive* Directive	2014/68/EU /UE L 189/164 Druckgeräte *Pressure equipment* Équipements sous pression
Konformitätsbewertungsverfahren *Conformity assessment procedure* Procédures d'évaluation de la conformité	Modul B + Modul C2
Notifizierte Stelle *Notified Body* *Organisme Notifié*	0036 TÜV SÜD Industrie Service GmbH Dudenstraße 28, D-68167 Mannheim
Normen und normative Dokumente *Standards and normative documents* Normes et documents normatifs	AD 2000 Regelwerk *AD 2000 Code* Code AD 2000
Klassifizierung *Classification* Classification	Rohrleitungsteil *Pipe* Tuyauterie
Fluid Kategorie ; Diagramm *Fluid category ; Diagramm* Dangerosité du fluide ; Tableau	Gruppe 1 ; Anhang II / 6 *Group 1 ; Attachment II / 6* Groupe 1 ; Appendice II / 6
Einstufung Druckgerät *Classification équipement sous pression* Classification pressure equipment	Kategorie III *Category III* Catégorie III

Die Angaben zur Richtlinie 2014/68/EU ist nur gültig für Druckgeräte die unter Artikel 4 Absatz 1 und 2 fallen, alle anderen unterliegen der guten Ingenieurspraxis nach Artikel 4 Absatz 3.
The information on Directive 2014/68 / EU is only valid for pressure equipment that falls under Article 4 Paragraph 1 and 2, all others are subject to good engineering practice according to Article 4 Paragraph 3.
Les informations sur la directive 2014/68 / UE ne sont valables que pour les équipements sous pression relevant de l'article 4, paragraphes 1 et 2, tous les autres sont soumis aux bonnes pratiques d'ingénierie conformément à l'article 4, paragraphe 3.

Richtlinie *Directive* Directive	2011/65/EU /UE L 174/88 Beschränkung gefährlicher Stoffe *Restriction of hazardous substances* Limitation de substances dangereuses
Delegierte Richtlinie *Delegated Directive* Directive Déléguée	(EU /UE) 2015/863 L 137/10 Änderung Anhang II der Richtlinie 2011/65/EU *Amending Annex II to Directive 2011/65/EU* Modifiant l'annexe II de la directive 2011/65/UE
Normen und normative Dokumente *Standards and normative documents* Normes et documents normatifs	EN IEC 63000:2018

Ort, Datum / *Place, Date* / Lieu, Date: **Speyer, 2023-01-30**

Dr. J. Ph. Herzog
Geschäftsführer
Managing director / Gérant

i . V. J. Riedl
stv. QM Beauftragter
Deputy QM Officer / Adjoint chargé de la qualité

Bopp & Reuther Messtechnik GmbH, Am Neuen Rheinhafen 4, 67346 Speyer / Germany
Telefon: +49(0)6232 657-0, **Telefax**: +49(0)6232 657-505, **Email**: info@bopp-reuther.com, **Internet**: www.bopp-reuther.com

Z-ML-KE ORZ-OI-OAP-OK-OP-elektrisch-V15 2023-01-30

BOPP & REUTHER MESSTECHNIK

EU - Konformitätserklärung
EU - Declaration of conformity
UE - Déclaration de conformité

Hiermit erklärt der Hersteller in alleiniger Verantwortung, dass die nachfolgend bezeichnete Baueinheit den Anforderungen der zutreffenden EU-Richtlinien entspricht. Bei nicht mit uns abgestimmten Änderungen verliert diese Erklärung ihre Gültigkeit.

The manufacturer herewith declares under sole responsibility that the unit mentioned below complies with the requirements of the relevant EU directives. This declaration is no longer valid if the unit is modified without our agreement.

Par la présente, le fabricant déclare sous sa seule responsabilité que les appareils décrits ci-dessous, correspondent aux exigences de la réglementation UE qui les concerne. Toute modification des appareils sans notre accord entraine la perte de validité de cette déclaration de conformité

Hersteller *Manufacturer* Fabricant	Bopp & Reuther Messtechnik GmbH Am Neuen Rheinhafen 4 D-67346 Speyer
Bezeichnung *Description* Description	Ovalradzähler *Ovalwheel meter* Compteur à roues ovales
Typ, Modell *Type, model* Type, modèle	OI / OUI / OaP / OUaP / OK / OP mit *with* avec E, D, M5

Richtlinie *Directive* Directive	2014/68/EU /UE L 189/164 Druckgeräte *Pressure equipment* Équipements sous pression
Konformitätsbewertungsverfahren *Conformity assessment procedure* Procédures d'évaluation de la conformité	Modul B + Modul C2
Notifizierte Stelle *Notified Body* *Organisme Notifié*	0036 TÜV SÜD Industrie Service GmbH Dudenstraße 28, D-68167 Mannheim
Normen und normative Dokumente *Standards and normative documents* Normes et documents normatifs	AD 2000 Regelwerk *AD 2000 Code* Code AD 2000
Klassifizierung *Classification* Classification	Rohrleitungsteil *Pipe* Tuyauterie
Fluid Kategorie ; Diagramm *Fluid category ; Diagramm* Dangerosité du fluide ; Tableau	Gruppe 1 ; Anhang II / 6 *Group 1 ; Attachment II / 6* Groupe 1 ; Appendice II / 6
Einstufung Druckgerät *Classification équipement sous pression* Classification pressure equipment	Kategorie III *Category III* Catégorie III

Die Angaben zur Richtlinie 2014/68/EU ist nur gültig für Druckgeräte die unter Artikel 4 Absatz 1 und 2 fallen, alle anderen unterliegen der guten Ingenieurspraxis nach Artikel 4 Absatz 3.

The information on Directive 2014/68 / EU is only valid for pressure equipment that falls under Article 4 Paragraph 1 and 2, all others are subject to good engineering practice according to Article 4 Paragraph 3.

Les informations sur la directive 2014/68 / UE ne sont valables que pour les équipements sous pression relevant de l'article 4, paragraphes 1 et 2, tous les autres sont soumis aux bonnes pratiques d'ingénierie conformément à l'article 4, paragraphe 3.

Bopp & Reuther Messtechnik GmbH, Am Neuen Rheinhafen 4, 67346 Speyer / Germany
Telefon: +49(0)6232 657-0, **Telefax**: +49(0)6232 657-505, **Email**: info@bopp-reuther.com, **Internet**: www.bopp-reuther.com

Z-ML-KE ORZ-OI-OAP-OK-OP-mechanisch-V13 2023-01-30

BOPP & REUTHER
MESSTECHNIK

Richtlinie *Directive* Directive	2011/65/EU /UE L 174/88 Beschränkung gefährlicher Stoffe *Restriction of hazardous substances* Limitation de substances dangereuses
Delegierte Richtlinie *Delegated Directive* Directive Déléguée	(EU /UE) 2015/863 L 137/10 Änderung Anhang II der Richtlinie 2011/65/EU *Amending Annex II to Directive 2011/65/EU* Modifiant l'annexe II de la directive 2011/65/UE
Normen und normative Dokumente *Standards and normative documents* Normes et documents normatifs	EN IEC 63000:2018

Ort, Datum / *Place, Date* / Lieu, Date: **Speyer, 2023-01-30**

Dr. J. Ph. Herzog
Geschäftsführer
Managing director / Gérant

i . V. J. Riedl
stv. QM Beauftragter
Deputy *QM Officer* / Adjoint chargé de la qualité

Bopp & Reuther Messtechnik GmbH, Am Neuen Rheinhafen 4, 67346 Speyer / Germany
Telefon: +49(0)6232 657-0, **Telefax**: +49(0)6232 657-505, **Email**: info@bopp-reuther.com, **Internet**: www.bopp-reuther.com

Z-ML-KE ORZ-OI-OAP-OK-OP-mechanisch-V13 2023-01-30

NOTES:

Our product portfolio:

Volume flowmeter:

- Oval wheel meter
- Turbine meter
- Electromagnetic flowmeter

Mass flowmeter:

- Vortex meter
- Compact orifice
- Coriolis mass flowmeter

Density and concentration meter (Measuring and testing equipment)

Dosing measurement technology

- Electromagnetic flowmeter
- Coriolis mass flowmeter
- Oval wheel meter
- Dosing control system

Measurement Accessories

- Processing electronics
- Mechanical indicator
- Pulse pick-ups
- Components

Measuring and testing equipment

Conformity assessment according to MID Directive 2014/32/EU

After Sales Service

Bopp & Reuther Messtechnik GmbH
Am Neuen Rheinhafen 4
67346 Speyer
Germany
Phone: +49 6232 657-0
Fax: +49 6232 657- 505
Email: info@bopp-reuther.com
https://www.bopp-reuther.com

BOPP & REUTHER
MESSTECHNIK